AI-8 Series High-Precision Multi-Loop Controller User Manual

V9.6

厦门宇电自动化科技有限公司

Table of Contents

1 OVERVIEW 1
1.1 Model Definition 3
1.2 Technical Specifications 6
1.3 Sensor Measurement Range: 7
2. INSTALLATION AND WIRING 8
2.1 D91 Appearance, Dimensions and Installation Method 8
2.2 D92 Appearance, Dimensions and Installation Method 9
2.3 Terminal Definitions 10
3.DESCRIPTION OF PANEL BUTTONS AND PARAMETER SETTING PROCEDURE 15
3.1 D91 Panel and Buttons 15
3.2 D92 Panel and Buttons 16
3.3 Set Global Parameters and Input/Output Group Parameters 17
3.4 Set Channel Parameters 18
4 QUICK SETUP AND OPERATION 19
4.1 Configure Global Parameters 19
4.2 Configure Input/Output Group Parameters 19
4.3 Configuring Channel Parameters 19
4.4 Operation 20
5 PARAMETER INTRODUCTION 20
5.1 Channel Parameters 21
5.2 Input Parameter Group 26
5.3 Output Parameter Group 28
5.4 Global Parameters 31
6. FREQUENTLY USED FUNCTIONS SETTINGS 35
6.1 Run and Stop 35
6.2: Auto-tuning 36
6.3 Alarm Settings 36
6.4 Output Channel PID and Measurement Channel Selection Function 37
6.5 Synchronization Function 38
6.6 Sensor Backup Function 38
6.7 Cascade Control Function 38
6.8 Slope Function 39
6.9 Input Nonlinear Correction Function 40
6.10 Multiple PID Functions 42
6.11 Bit Control and Manual Output Function 43
6.12 Follow Output Function 43
6.13 Combination Mode Multi-Channel Instrument 44
7 COMMUNICATION FUNCTIONS AND COMPLETE PARAMETER REGISTERS 45
8 ALARM AND FAULT HANDLING 55

Friendly Reminder
1. The user of this product must have sufficient knowledge of electrical systems and ensure that this product is not used in situations that may pose a danger to personal safety or property. Before using this product for the first time, please read the entire user manual carefully to ensure proper use. 2. If the features do not match those described in this manual, please confirm your model version and download the corresponding manual from the official website, or contact the technical support hotline for assistance. 3. Unauthorized modification or disassembly of the module casing may result in unexpected errors or hazards. Please do not use unused terminals. 4. During installation, avoid areas with high voltage, high-frequency noise, or high current to prevent interference. 5. Please make sure to disconnect the power supply before wiring or replacing modules. Sensor inputs and loads should be wired separately. 6. When using a thermocouple input, be sure to use compensation wires that match the thermocouple specifications and connect them directly to the input terminals. 7. When using a three-wire RTD input, ensure that all three wires are of equal length and impedance to avoid introducing additional measurement errors. 8. Before powering on, please ensure that the power supply, input, and output wiring are correct; otherwise, serious damage may occur. Do not touch the module terminals or perform maintenance after powering on, as this may result in electric shock. 9. This product is a high-precision instrument. Do not subject it to any kind of strong pressure or force, as this may damage the internal components and affect normal operation.

1 Overview

The Yudian AI-8 Series High-Precision Multi-Loop PID Controller is a multi-loop PID controller featuring multi-loop high-speed, high-precision sampling capabilities, with the capability to externally expand input and output modules. By adding external expansion modules, it is possible to achieve high-performance, multifunctional control of 4 to 8 channels, comparable to single-loop controllers. When cost and size are a priority, the system can support measurement and control for up to 96 channels, meeting the needs of emerging industries that require compact size and multi-loop control. In the expanded mode, the host computer only needs to communicate with a single instrument to control up to 96 measurement and control channels, significantly improving communication efficiency compared to the model that requires accessing multiple addressable instruments. Its commonly used parameters allow unlimited write operations from the host computer, ensuring that the instrument's internal memory is not damaged by frequent writes. The parameter write restriction feature allows modifications to specific or all instrument parameters only when the Loc is set to a specific value, reducing the possibility of instrument malfunctions caused by errors in communication software programming.

The AI-8 Series High-Precision Multi-Loop PID Controller also offers many unique advantages, as follows:

(1) It offers both multi-loop centralized control and the performance of a single-loop instrument, with measurement accuracy and temperature drift levels available up to 0.05 class and 25ppm/℃. When the sampling period is 20ms, the input amplifier noise is less than 1μV. At a 20ms sampling period, the anti-interference capability against 50Hz reaches up to 120dB. It passes an 8KV group pulse anti-interference test and a 100℃ high-temperature aging test. The built-in PT100 platinum resistor is used to measure the thermocouple cold junction compensation temperature, providing significantly higher accuracy compared to commonly used semiconductor or thermistor sensors.

(2) Expandable up to 96 channels of control outputs and 256 channels of alarm outputs, and with input expandability to 96 analog measurement inputs and 16 switch event input channels. Each output channel has 4 alarm settings and input error alarms, totaling 5 alarm signals. All alarm signals can be defined as independent output or common output to conserve alarm output ports.

(3) Supports advanced features such as slope control for heating and cooling, multiple synchronized outputs, and backup input sensors. It can also be configured for cascade control, with up to 48 cascade control loops possible across 96 channels.

(4) Equipped with an operation interface featuring an LED digital display, it allows quick viewing and modification of parameter settings for any channel. Major internal register values of the instrument can be edited, enabling emergency operation even in the event of a host computer failure.

(5) When selecting different control channel numbers and functions, the usage and register addresses remain identical. This means that customers only need to learn how to use the single model of the series instrument to meet various functional needs, significantly reducing learning costs.

(6) An operation mode that combines high flexibility and efficiency. The full functionality of the controller can be realized through reading and writing register parameters. Its registers are divided into channel parameters, input/output group parameters, and common parameters. Channel parameters are independently set for each channel, including setpoint, PID parameters, and alarm parameters. Input/output parameters each have 4 different configuration groups, which can be selected and applied by the respective input and output channels. Common parameters are global parameters used across the system, such as baud rate and communication address. Based on the parameter group definition model, the controller can significantly reduce the total number of registers while maintaining flexibility and powerful functionality. This simplifies the operating mode and improves the read/write efficiency of the host computer.

For example, if all 96 input channels of the controller have uniform specifications, all input parameters can be configured using the first parameter group. This way, only one set of input configuration parameters needs to be set to define the input specifications for all channels. Alternatively, different parameter sets can be choosed to define different types of input specifications. A single controller can define up to four different types of input specifications, which is sufficient to meet the requirements of most application scenarios.

(7) Highly expandable, the AI-8 Series High-Precision Multi-Loop PID Controller can support virtually unlimited expansion of input and output modules, and can be quickly customized to meet customer requirements.

1.1 Model Definition

The AI-8 Series High-Precision Multi-Loop PID Controller features a modular design for its internal I/O, allowing up to 3 modules to be installed. The modules can be selected and freely combined based on specific needs. The instrument model consists of following parts, for example:

AI-	8848G	D91	J7	G71	N	G61	S2	-24VDC
	①	②	③	④	⑤	⑥	⑦	⑧

This indicates that a single instrument: ① The basic function is AI-8848G; ② D91 rail mounting size, with 4-digit digital display; ③ J7 is a universal thermocouple/RTD input type (a fixed input type, not modular); ④ installed with 4 NPN outputs; ⑤ N indicates no modules to be installed on the position; ⑥ Equipped with G61, supporting 2 NPN outputs, which can be used for alarms; ⑦ A fixed 485 communication module S2; ⑧ The instrument power supply is 24VDC.

The definitions of each part of the instrument model are as follows:

① indicates the basic function of the instrument

8848G represents a 0.1 accuracy, 4-channel controller, isolated input type;

8848 represents a 0.1 accuracy, 4-channel controller, non-isolated input type;

8888G represents a 0.1 accuracy, 8-channel controller, isolated input type;

8888 represents a 0.1 accuracy, 8-channel controller, non-isolated input type;

8648G represents a 0.15 accuracy, 4-channel controller, isolated input type;

8648 represents a 0.15 accuracy, 4-channel controller, non-isolated input type;

8688G represents a 0.15 accuracy, 8-channel controller, isolated input type;

8688 represents a 0.15 accuracy, 8-channel controller, non-isolated input type;

② indicates the instrument size

D91 rail-mounted size, double-row LED display, with button operation.

D92 rail-mounted size, no display or buttons, can be set and operated via communication or by connecting an external E85 keyboard and display.

Special dimensions for D91H combination mode multi-channel instrument; display operation is the same as D91. The “S2-24VDC” in the multi-in-one model designation can be omitted. For specific combinations, please consult technical support.

Special dimensions for D92H combination mode multi-channel instrument; display operation is the same as D92. The “S2-24VDC” in the multi-in-one model designation can be omitted. For specific combinations, please consult technical support.

(Note: The D91/D92/D91H/D92H dimensions can only support connections to low-voltage circuits.)

③ indicates supported input type (fixed input type, non-modular)

J0 indicates a three-wire RTD input model

J1 indicates a thermocouple input model

J2 indicates a four-wire RTD input model

J7 indicates a universal thermocouples and RTD input model

J3 indicates voltage input of 1~5V, 0~5V, 2~10V, or 0~10V

J4 indicates 4~20mA current input

J9 indicates a 0~10mA AC current input, which is typically used with a 2000:1 current transformer to achieve a 0~20A AC input.

Common collocations for ①②③ are as follows

AI-8848GD91J3	AI-8888D92J0	AI-8648D91J0	AI-8688D92J0
AI-8848GD91J4	AI-8888GD92J1	AI-8648D91J3	AI-8688GD92J1
AI-8848GD91J7	AI-8888GD92J4	AI-8648GD91J4	AI-8688GD92J4
		AI-8648GD91J7	

④ indicates the specification of the module to be installed for the major output (OUTP) of the instrument: Modules such as G71, X74, etc., can be installed.

⑤ indicates the specifications of the module to be installed for the auxiliary output (AUX) of the instrument: Modules such as G71, X74, etc., can be installed. (Due to channel limitations, 4-channel instruments are generally not installed.)

⑥ indicates the specification of the module to be installed for alarm (ALM) of the instrument: Modules such as G62, G61, etc., can be installed.

⑦ Fixed 485 communication module S2, supports MODBUS-RTU protocol

⑧ indicates instrument power supply, with fixed power supply of 24VDC

Note 1: This instrument uses automatic zeroing and digital calibration technology, making it a maintenance-free instrument. If the instrument fails to meet calibration standards, it can usually be restored to accuracy by cleaning and drying the internal components. If drying and cleaning do not restore accuracy, the instrument should be considered faulty and returned to the manufacturer for repair.

Note 2: The instrument is free of charge for repair during the warranty period. If the instrument requires repair, please provide a description of the failure symptoms and causes to ensure proper and comprehensive repairs.

Note 3: Commonly used module models and functions are as follows:

Module Name	Functional Description
G61	Three-channel isolated NPN output, can be externally connected to 5~24VDC to drive SSR or intermediate relay, maximum external voltage 28VDC, maximum drive current per channel 100mA (suitable for alarms)
G62	Three-channel isolated PNP output, can be externally connected to 5~24VDC to drive SSR or intermediate relay, maximum external voltage 28VDC, maximum drive current per channel 100mA (suitable for alarms)
G53	Dual solid-state relay alarm outputs (non-powered), compatible with both PNP and NPN wiring. Can be externally connected to 5~24VDC to drive SSR or intermediate relay, maximum external voltage 28VDC, maximum drive current per channel 50mA (suitable for alarms, designed for use with X74)
G71	Four-channel isolated NPN output, can be externally connected to 5~24VDC to drive SSR or intermediate relay, maximum external voltage 28VDC, maximum drive current per channel 100mA (Suitable for control applications)
X74	Four-channel optically isolated linear current output module (does not use the instrument's internal isolated power supply), drive voltage approximately 6V, with a maximum load capacity of about 260 ohms.

Note: For other unlisted modules, please refer to the selection manual or contact technical support.

1.2 Technical Specifications

Power Supply	24VDC, -15%~ to +10%
Power Consumption	≤0.3W (when there is no output or external power feeding consumption); total maximum power consumption of the entire unit ≤3W
Input Specifications	Thermocouple: K, S, R, E, J, T, B, N, WRe3-WRe25, WRe5-WRe26, etc.
	RTD: Cu50, Pt100, Pt1000, Ni120, etc.
	Linear voltage: 0~75mV, 0~20mV, 0~50mV, 0~10V, 1~5V, 0~1V, etc.
	Linear current: 4~20mA, 0~20mA
	Frequency input: For performance details, refer to the relevant expansion input modules
Measurement Accuracy	88x8/88x8G: 0.1 accuracy; PT100, S and B thermocouples, and mV input can be customized for 0.05 accuracy measurement.
	86x8/86x8G: 0.15 accuracy.
Measurement Temperature Drift	≤50 ppm/°C (0.1 accuracy; ≤25 ppm/°C when optional 0.05 accuracy is selected); ≤75 ppm/°C (0.15 accuracy)
Control Cycle	Minimum 20ms (single-channel control); for multiple channels, each channel occupies 10ms.
Control Mode	AI artificial intelligence adjustment, featuring advanced control algorithms with fuzzy logic PID control and auto-tuning function
	ON/OFF control mode(adjustable hysteresis)
	Manual control mode
Output Specifications	NPN or PNP switching output: Maximum voltage 28V, maximum current 100mA. When driving a relay coil, a fast-recovery diode must be connected in parallel with the relay coil to absorb reverse voltage
	Linear current output: 0~20mA; 4~20mA, resolution approximately 20,000 counts, maximum load 260 ohms (energy-saving type)
	Linear voltage output: 2~10V, 0~10V, resolution approximately 10,000~20,000 counts
	SSR Drive Output: 12VDC/12mA
Alarm Function	High limit, low limit, deviation high limit, deviation low limit, and other methods
Communication Method	Bottom RS485 bus terminal; Support MODBUS-RTU protocol; Baud rate adjustable from 4,800 to 115,200; the communication delay of each input or output expansion module node is approximately 10ms (including data transmission time) when connected in series.
	The bottom RS485 bus terminal can connect to the company's TCP-MODBUS and EtherCAT communication controllers, supporting related communication protocols.
	Internal dedicated communication protocol is adopted between the host, slave, and expansion modules, with a reliable communication distance of 30m.

Electromagnetic Compatibility	IEC61000-4-4 (Electrical Fast Transient) ±6KV/5KHz, IEC61000-4-5 (Surge) 6KV, and the instrument operates without freezing or malfunctioning of I/O ports under 10V/m high-frequency electromagnetic interference, with measurement value fluctuation not exceeding ±5% of the full scale
Isolation Withstand Voltage	≥2300V between the power supply and signal terminals; ≥600V between mutually isolated low-voltage signal terminals
Usage Environment	Temperature: -10~60°C; Humidity: ≤90% RH

1.3 Sensor Measurement Range:

Input Type	Measurement Range	Input Type	Measurement Range
0 K	-200~+1300℃	12 F2 High-temperature radiometer	450~2000℃
1 S	-50~+1700℃	13 T	0~300.00℃
2 R	-50~+1700℃	17 K	0~300.00℃
3 T	-200~+350℃	18 J	0~300.00℃
4 E	0~800℃	19 Ni120	-50~+270.00℃
5 J	0~1000℃	20 Cu50	-50~+150℃
6 B	200~1800℃	21 Pt100	-200~+800℃
7 N	0~1300℃	22 Pt100	-200.00~+300.00℃
8 WRe3-WRe25	0~2300℃	23 Pt1000	-200.00~+300.00℃
9 WRe5-WRe26	0~2300℃		
Linear input	-9990~+32000, user-defined		

2. Installation and Wiring

2.1 D91 Appearance, Dimensions and Installation Method

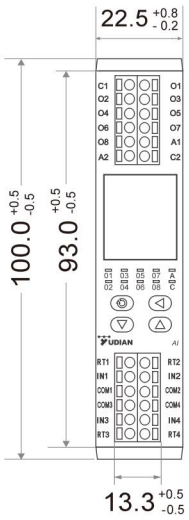

Front View

Unit: mm

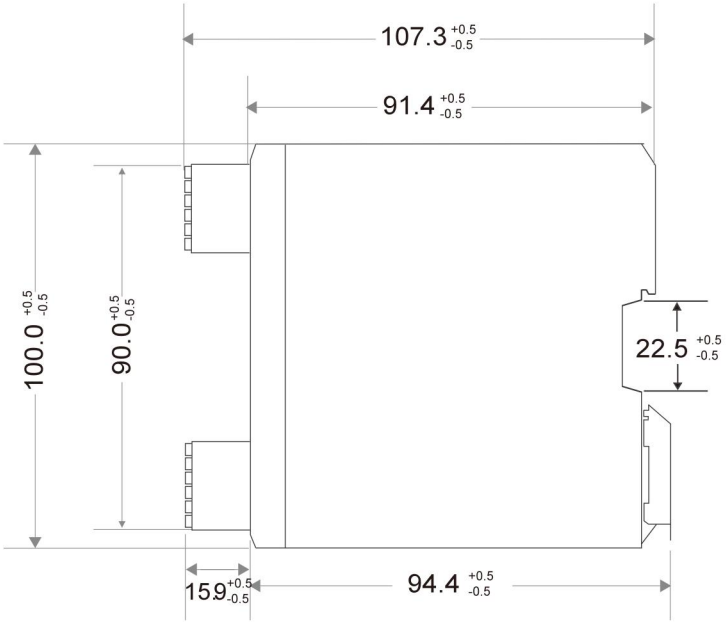

Side View

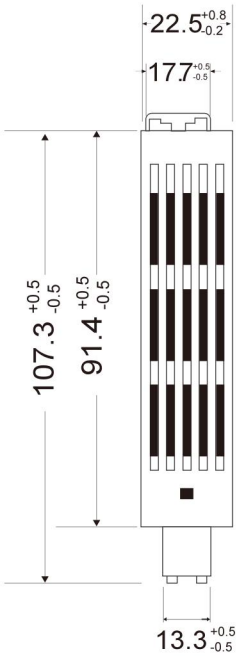

Top View

Note: This diagram is for reference onlyregarding the dimensions andinstallation method of D91. Please referto the actual product for the specificpanel and terminal details

2.2 D92 Appearance, Dimensions and Installation Method

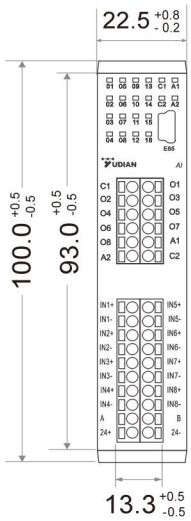

Front View

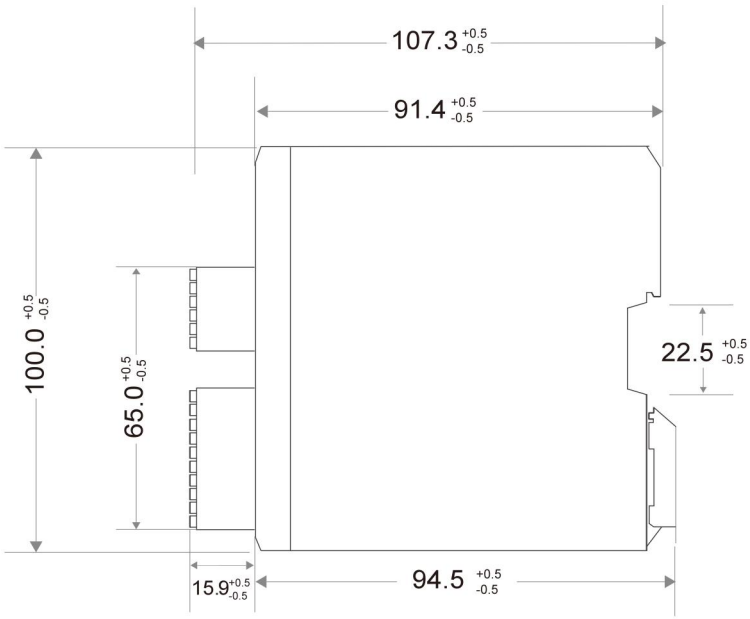

Unit: mm

Side View

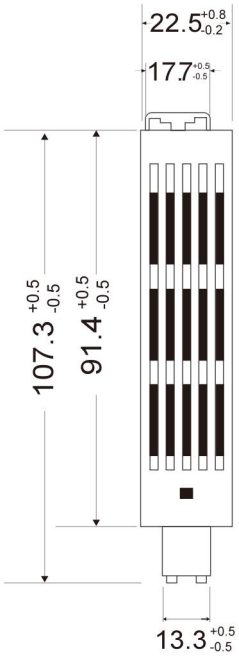

Top View

Note: This diagram is for reference onlyregarding the dimensions andinstallation method of D92. Please referto the actual product for the specificpanel and terminal details

(1) Please install the module onto a 35mm DIN rail.

(2) The rail module must be installed vertically. For ease of maintenance, it is recommended to allow a minimum clearance of 50 mm on all sides (top, bottom, left, and right).

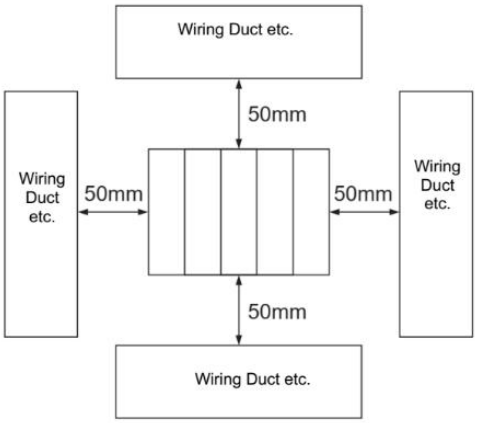

(3) The input and output use quick-connect terminals. It is recommended to use pin-type terminals with a copper tube length of at least 10mm for wiring.

(4) When wiring the power supply and communication terminals, please set the tightening torque to 0.39–0.58 N·m.

(5) Installation should be avoided in environments where temperature and humidity exceed specified limits, where there are corrosive gases, where mechanical vibrations are beyond specified ranges, or in outdoor locations.

2.3 Terminal Definitions

2.3.1 Power Supply and Communication Terminals

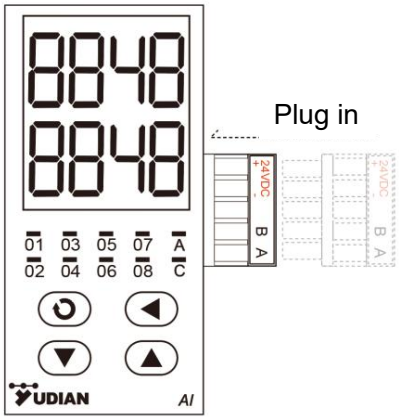

Connect 24V+ and 24V− to the switching power supply, and connect A and B to the AB terminals of the host computer. Once the DIN rail terminals are connected, the power supply and communication lines are already connected in parallel.

Note: *The power supply and communication terminals are located at the bottom right side of the module. When connecting multiple modules, only one set of power supply and communication terminals is needed.*

2.3.2 J0 Module Input Terminals

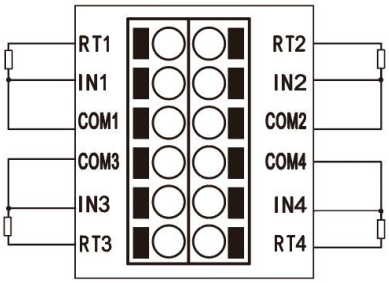

4-channel J0 PT100/PT1000 RTD Input

For example, with the first input channel, when connecting a RTD, connect the two wires that are the same color or have the lowest resistance to IN1 and COM1, and connect the remaining wire to RT1.

Note: *For PT100 input, please ensure the wiring is connected before powering on again.*

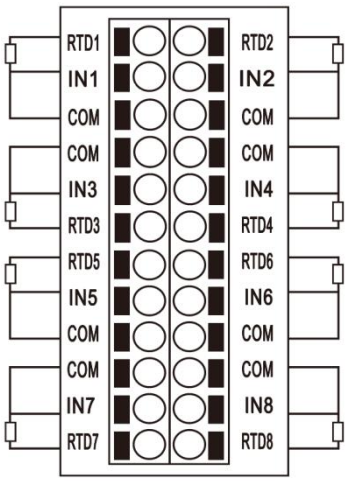

8-channel J0 PT100/PT1000 RTD Input

For example, with the first input channel, when connecting a RTD, connect the two wires that are the same color or have the lowest resistance to IN1 and COM1, and connect the remaining wire to RT1.

Note: *For PT100 input, please ensure the wiring is connected before powering on again.*

2.3.3 J1 Module Input Terminals

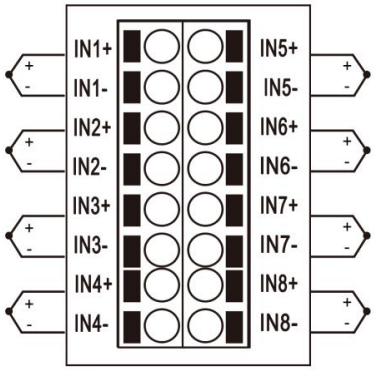

8-channel J1 Thermocouple Input

The 8-channel thermocouple input wiring should be connected to INX+ and INX- respectively. For the first channel as an example, IN1+ should be connected to the positive terminal of the thermocouple, and IN1- should be connected to the negative terminal of the thermocouple

---

2.3.4 J2 Module Input Terminals

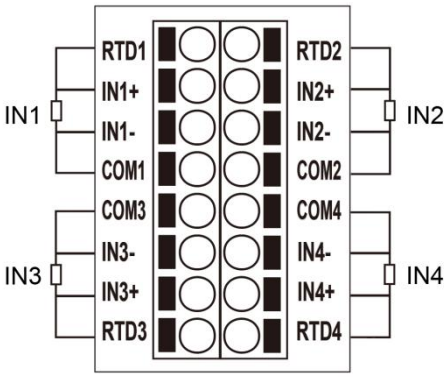

4-channel J2 four-wire RTD

Taking the first input channel as an example, a four-wire RTD typically has two pairs of wires with the same color or lower resistance. One pair is connected to IN1+ and RTD1, while the other pair is connected to IN1- and COM1.

2.3.5 J7 Module Input Terminals

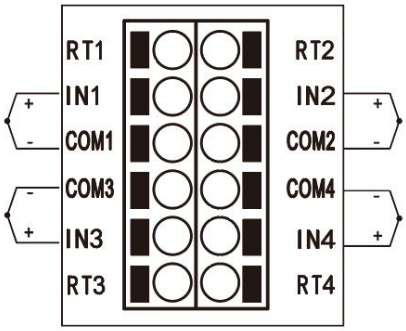

J7 Thermocouple Input

For example, with the first input channel, when connecting a thermocouple, IN1 should be positive and COM1 should be negative.

J7 PT100 RTD Input

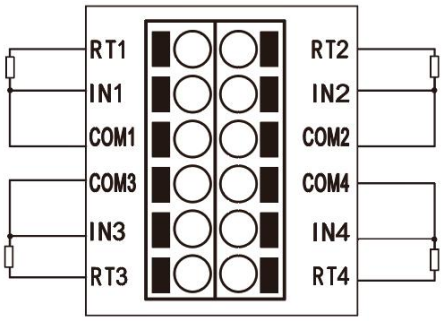

For example, with the first input channel, when connecting a RTD, connect the two wires that are the same color or have the lowest resistance to IN1 and COM1, and connect the remaining wire to RT1.

Note: *For PT100 input, please ensure the wiring is connected before powering on again.*

2.3.6 J3/J4 Module Input Terminals

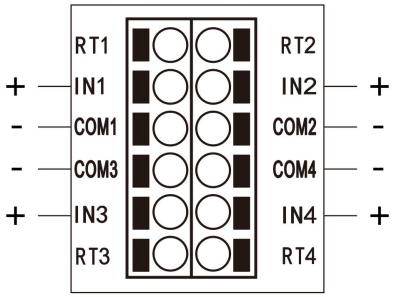

J3 Linear Voltage Input

For example, for the first input channel, when connecting a linear voltage input, IN1 is positive and COM1 is negative.

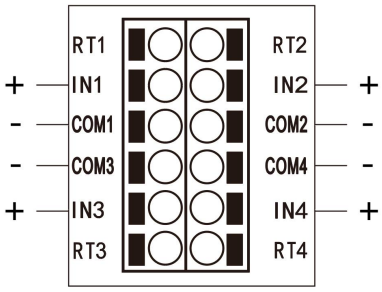

4-channel J4 Linear Current Input

For example, for the first input channel, when connecting a linear current input, IN1 is positive and COM1 is negative.

8-channel J4 Linear Current Input

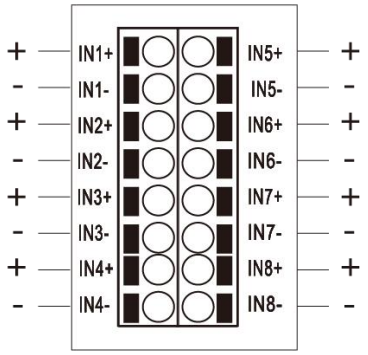

For example, for the first input channel, when connecting a linear current input, IN1+ is positive and IN1- is negative.

2.3.7 Output Module Terminals

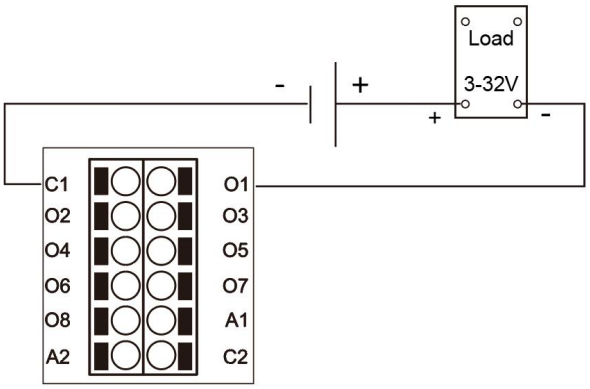

NPN Output

When installing NPN output modules G71/G61, the common terminals C1 should be connected to the negative terminal of the 24V switch power supply. The outputs O1~O4 should be connected to the negative terminal of the rear-end solid-state relays (or other devices), while the positive terminal of the solid-state relays (or other devices) should be connected to the positive terminal of the 24V switch power supply.

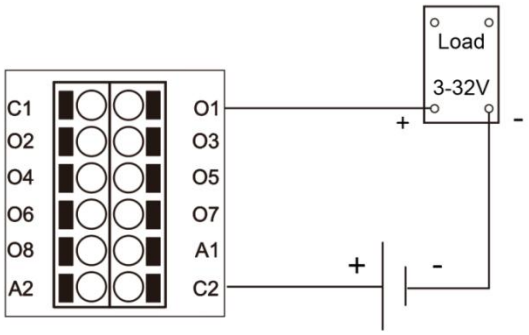

PNP Output

When installing PNP output, G72 and G62 modules should be used in combination, the common terminals C2 should be connected to the positive terminal of the 24V switch power supply. The outputs 01~04 should be connected to the positive terminal of the rear-end solid-state relays (or other devices), while the negative terminal of the solid-state relays (or other devices) should be connected to the negative terminal of the 24V switch power supply.

Note: C1 cannot be used as the common terminal.

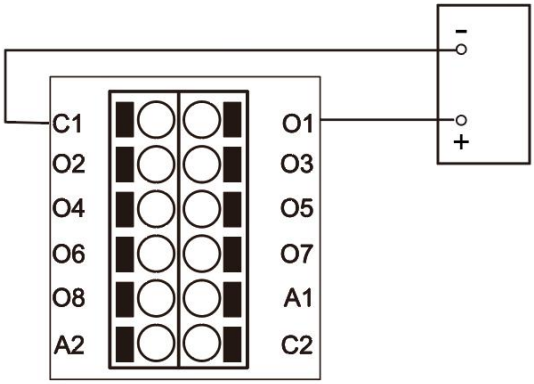

Active Output

When installing active output modules (such as X74), the common terminal C1 should be connected to the negative terminal of the solid-state relay (or other device); O1~O4 should be connected to the positive terminals of the downstream solid-state relays (or other devices).

2.3.8 Alarm Output Terminals

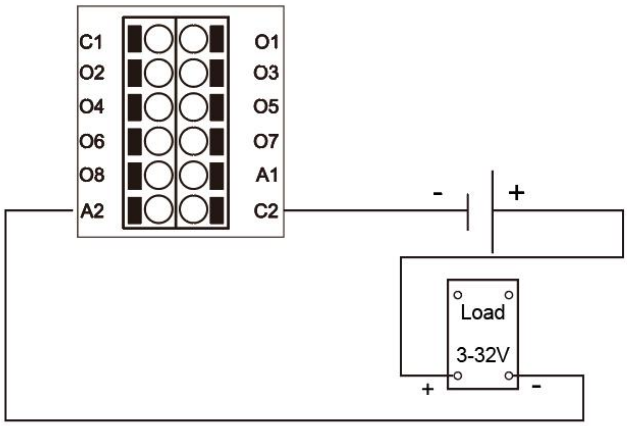

NPN Alarm Output

When installing NPN output modules like G61, the common terminals C2 should be connected to the negative terminal of the 24V switch power supply. The outputs A1, A2 should be connected to the negative terminal of the rear-end solid-state relays (or other devices), while the positive terminal of the solid-state relays (or other devices) should be connected to the positive terminal of the 24V switch power supply.

3.Description of Panel Buttons and Parameter Setting Procedure

3.1 D91 Panel and Buttons

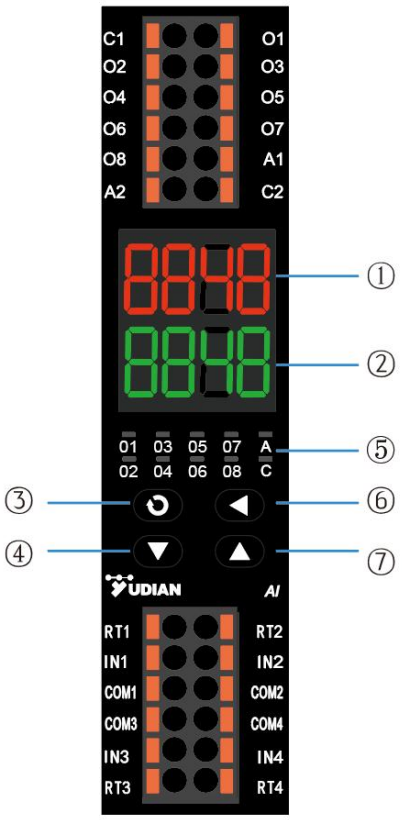

① Upper Display Window: Display measured values PV, parameter names, etc.

② Lower display window: Display the set value SV, alarm code, parameter values, etc.

③ Set Key (Also used for toggling between manual/automatic cycling display modes)

④ Data Decrease Key (also used to switch to the previous channel display)

⑤ 10 LED indicators: 01~04 correspond to the 4-channel output, the C light is the communication indicator, 07 indicates a global alarm, the A light indicates either A1 or A2 output

⑥ Data Shift (Also used to switch to setpoint display)

⑦ Data Increase Key (Also used to switch to the next channel display)

3.2 D92 Panel and Buttons

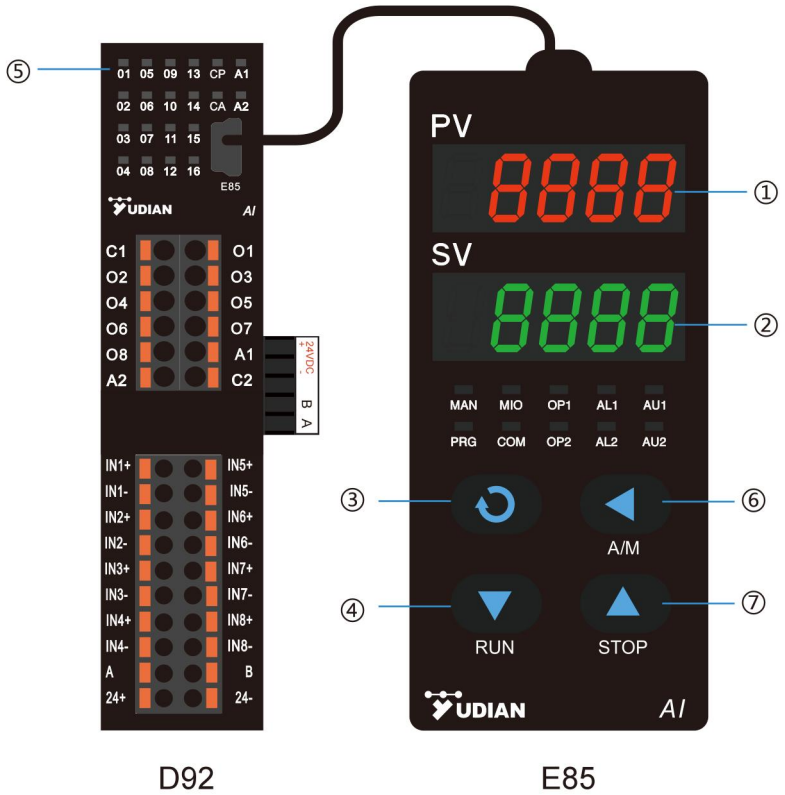

① Upper Display Window: Display measured values PV, parameter names, etc.

② Lower display window: Display the set value SV, alarm code, parameter values, etc.

③ Set Key (Also used for toggling between manual/automatic cycling display modes)

④ Data Decrease Key (also used to switch to the previous channel display)

⑤ 01~08 lights correspond to 8 output channels. The CP light flashes when communication is active, and stays on continuously when powered but not communicating. The CA light indicates a global alarm, A1 corresponds to alarm AL1, and A2 corresponds to alarm AL2.

⑥ Data Shift (Also used to switch to setpoint display)

⑦ Data Increase Key (Also used to switch to the next channel display)

3.3 Set Global Parameters and Input/Output Group Parameters

(1) Long press and hold the Set Key to enter the group and global parameter setting mode. Initially, the quick parameters defined by the EP parameters will be displayed.

(2) Long press and hold the left button to find and unlock the LOC parameter, the 4 preset input/output configuration parameters and global function parameters can be displayed and configured.

(3) In the parameter setting mode, long pressing the Shift Key will return to the previous parameter. If the Set Key is pressed simultaneously, the user can exit the parameter setting mode immediately.

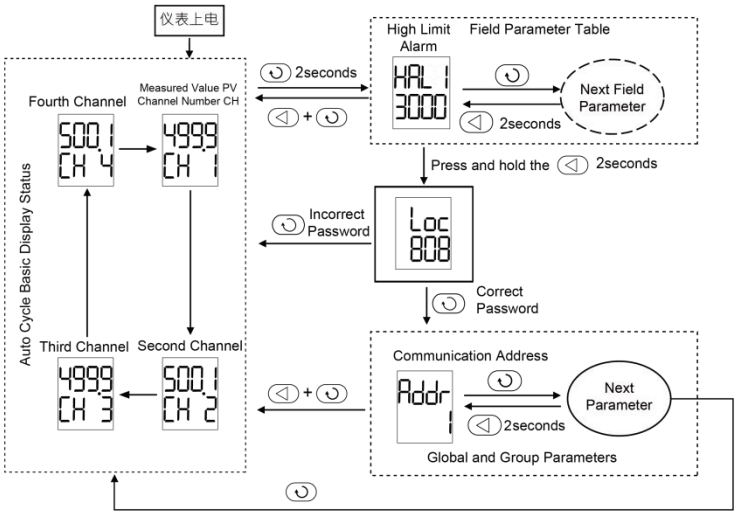

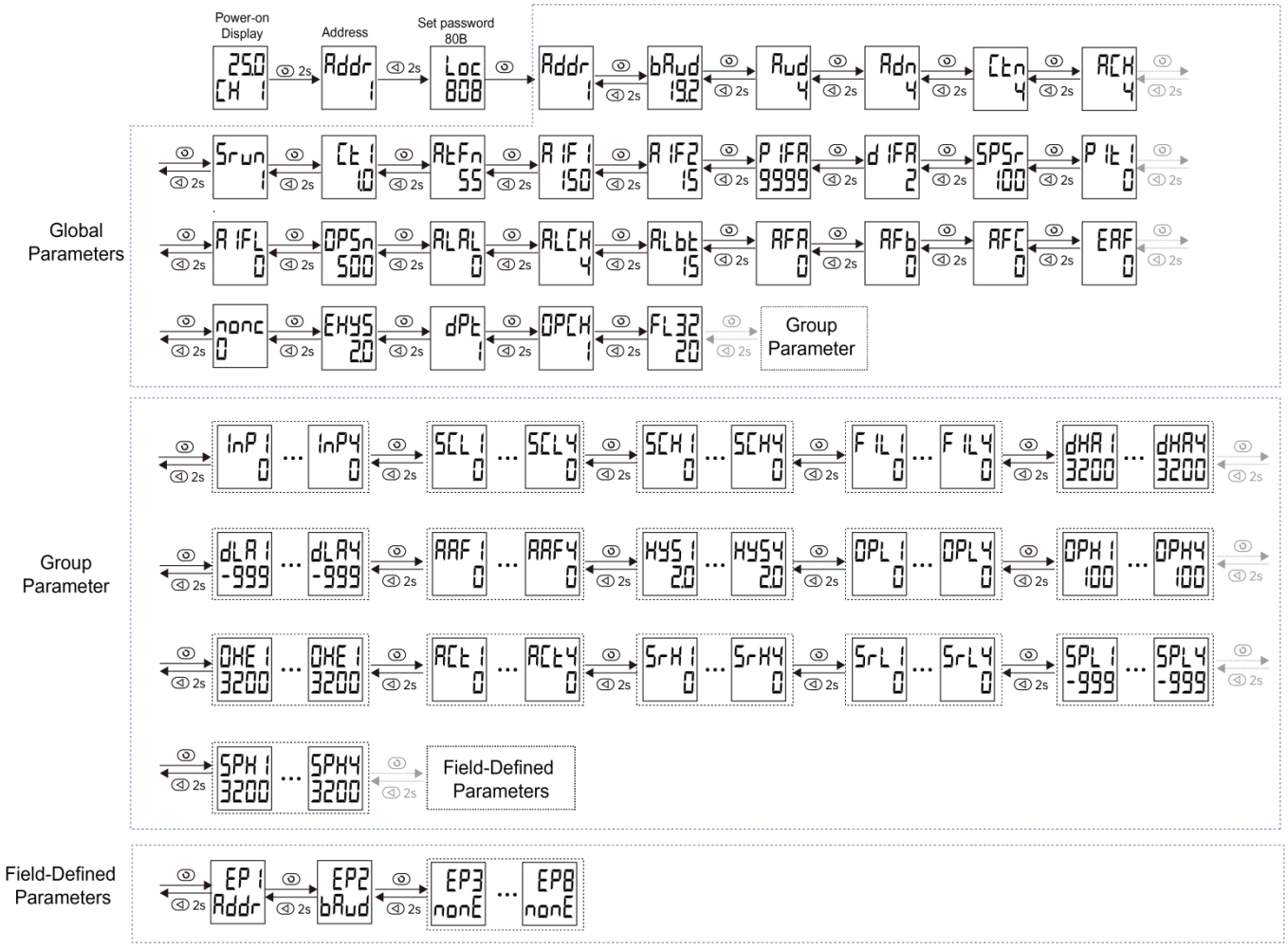

3.4 Set Channel Parameters

(1) Long pressing the Shift Key will enter the parameter setting mode for the currently displayed channel. Users can view and modify setpoint values, PID parameters, etc. If the parameter lock Loc is unlocked, the values can be modified.

(2) In the parameter setting mode, long pressing the Shift Key will return to the previous parameter. If the Set Key is pressed simultaneously, the user can exit the parameter setting mode immediately.

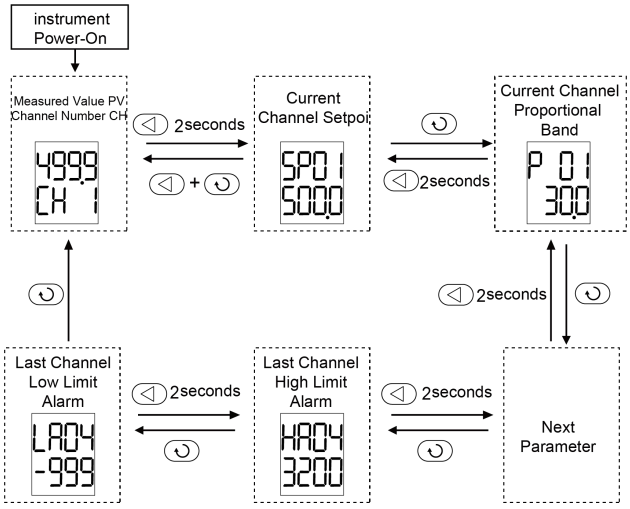

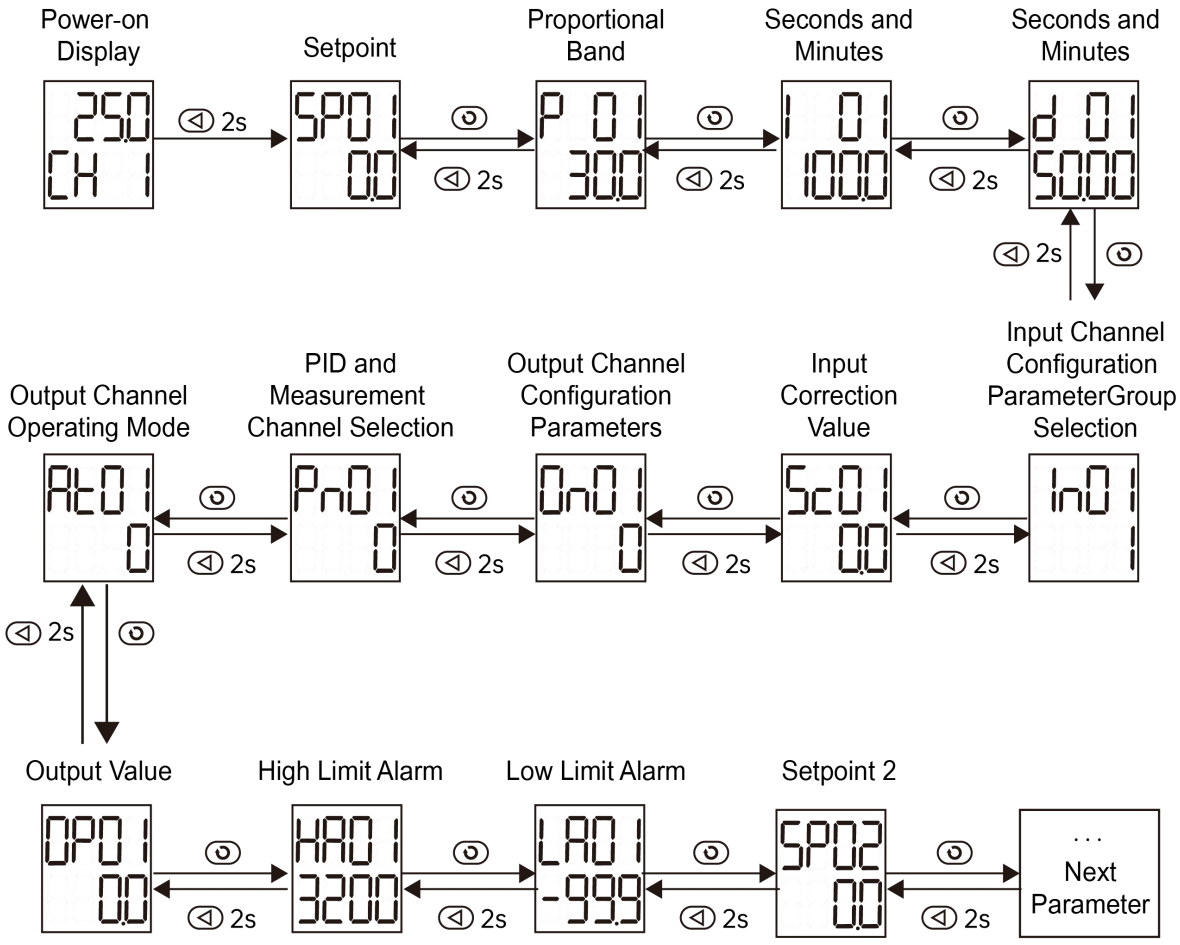

4 Quick Setup and Operation

The module's default communication address is 1, with a communication baud rate of 19.2K. Each channel can be configured to use the same input/output group parameters or to separately use parameters from input/output groups 1 to 4. Parameter values can be set via the panel buttons or written through communication. Recommended sequence for setting parameters when powering on a new module for the first time:

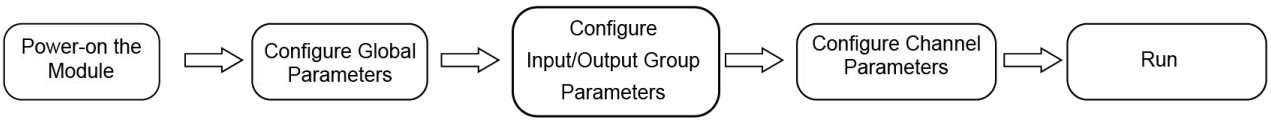

4.1 Configure Global Parameters

The main global parameters to be set include: Addr (communication address), bAud (communication bAud rate), Ctn (number of control loops), Srun (run/stop selection), CtI (control period), dPt (decimal point position), AtFn (auto-tuning style), and function parameters such as AFA/AFB/AFC. If there are no special control requirements, you only need to set the Addr communication address and the bAud communication bAud rate parameters, and ensure that Loc is set to 0 to avoid any restrictions on writing values. The other parameters can remain at their default settings.

4.2 Configure Input/Output Group Parameters

The main parameters set in the input/output group include: InP input specification, ScL/ScH input upper and lower scale limits, FIL digital filtering, HYS hysteresis, OPL/OPH output upper and lower limits, Act control function selection, and Srh/SrL heating/cooling slope. If there are no special control requirements, only the InP and HYS parameters need to be set in heating mode. In cooling mode, only the InP, HYS, and Act parameters need to be set; all other parameters can remain at their default values.

4.3 Configuring Channel Parameters

The main parameters set for the channel include: SP setpoint, PID, In input parameter group selection, On output parameter group selection, Pn channel configuration, At channel operating mode, and Sc measurement value offset, among others. PID parameters can be entered directly based on experience, or obtained through the auto-tuning function. If there are no special control requirements and all channel input and output configurations are the same, you only need to set the SP parameter. If different input and output group parameters need to be configured for each channel, you should set the SP, In, On, and Pn parameters, while keeping the other parameters at their default values.

4.4 Operation

After the module is powered on, it defaults to automatic operation mode. You can switch it to stop mode by setting the At or Srun parameters. Once the parameter settings are complete and the device is ready to operate, if you have experience with PID parameters, you can set them directly and start operation. If you do not have experience with PID parameters, set At=1 to enable auto-tuning. Once the tuning process is finished, the device can operate normally.

For detailed instructions, refer to Chapter 3; for parameter introduction, refer to Chapter 5.

5 Parameter Introduction

The parameter types of the AI-8 Series High-Precision Multi-Loop Controller are divided into channel parameters, configuration group parameters, and global parameters.

(1) There are 12*96 channel-independent parameters. Each channel can be independently defined with 12 parameters: setpoint, proportional band, integral time, derivative time, control mode, output value (also serves as manual value input setting), control output parameter group number and table programming entry address, input channel and allocation of setpoint and PID parameter group, input specification group and input table correction entry address, input offset correction, high limit alarm, and low limit alarm.

(2) Configuration group parameters include 4 groups of input configuration parameters and 4 groups of control output configuration parameters (including alarm configurations). The measurement input group parameters include input specifications, filter intensity, scale lower limit, scale upper limit, and other parameters. The output group parameters include output limits, positive and negative deviation alarms, hysteresis, and functional configurations. Configuration group parameters are effective for the channels that select these parameters, and multiple channels can share one or more configuration groups.

(3) In addition, there are global parameters such as communication address and baud rate. Global parameters are applicable to all channels (Note: depending on the extension software, some products may not have all the parameters. In the document, "XX" represents the channel number).

5.1 Channel Parameters

Used to set setpoints, PID parameters, input/output parameter group configurations, operating modes, alarm values, and more for input channels.

Address Code	Register	Parameter Name	Functional Description
0000H~ 005FH	0000~0095	SP01~SP96 Group 1~96 Preset Setpoints	Setting range: -9990~32000. The setpoint and PID together form a parameter group consisting of 4 parameters. Output channels can select different groups as setpoint and PID parameters via the PnXX parameter. Typically, the output channel number and PID parameter group number are the same, but the output channel can also switch to choose different setpoint and PID parameter groups. Different output channels can share the same PID and setpoint parameter groups.
0060H~ 00BFH	0096~0191	P01~P96 Proportional Band	Setting range: 0~32000, with the same unit as the setpoint.
00C0H~ 011FH	0192~0287	I 01~I 96 Integral Time	Unit: 0.1 seconds, setting range: 0.0~3200.0 seconds.
0120H~ 017FH	0288~0383	d01~d96 Derivative Time	Unit: 0.01 seconds, setting range: -327.60~+327.60 seconds. (The maximum result for auto-tuning is +327.60. For larger values, you can manually write the value as an unsigned 16-bit number, which will be displayed as the corresponding signed 16-bit value on the table.)
0180H~ 01DFH	0384~0479	In01~In96 Input Channel Configuration Parameter Group Selection	Setting range 0~9999. The unit digit is set to 1~4 to select the input specification group for the configured measurement channel. Setting it to 0 disables measurement for that channel. The tens and hundreds digits configure the multi-segment curve correction address for the measurement channel. Setting it to 0 disables the correction. For example, setting In01=112 means that Channel 1 selects the 2nd input configuration parameter group, and the multi-segment curve correction entry address for that channel is d11.

		In01~In96 Input Channel Configuration Parameter Group Selection Description	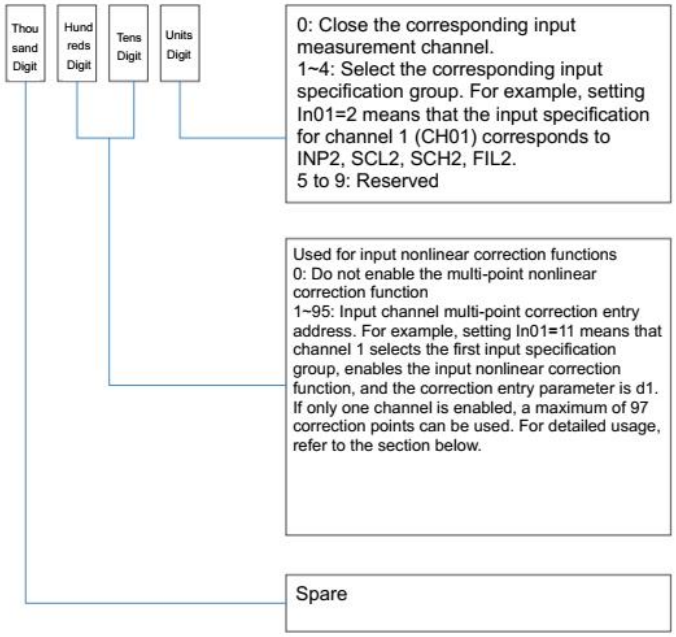
01E0H~ 023FH	0480~0575	Sc01~Sc96 Input Channel Measurement Value Offset	Setting range: -9990~32000, used for offsetting and correcting the measurement value. Specifically, if the input channel measurement is disabled, the physical measurement value will be 0. Writing this value is equivalent to assigning the measurement value for that channel via the host computer or program.
0240H~ 029FH	0576~0671	On01~On96 Output Channel Configuration Parameters	Setting range 0~9999. The unit digit is set to 1~4 to select the output channel configuration parameter group. The tens, hundreds, and thousands digits are reserved for future use. When the default value is 0, it is associated with output parameter group 1.
		On01~On96 Output Channel Configuration Parameters	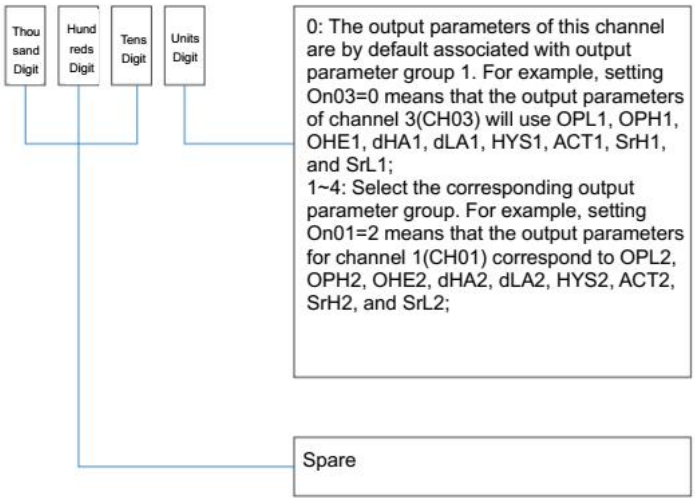

02A0F~ 02FFH	0672~0767	Pn01~ Pn96 Output Channel PID Configuration Parameter Group and Measurement Channel Selection	Setting range 0~9999. In normal mode (parameter AFB.2=0), for the units and tens digits, set 1~96 to select the PID and setpoint SP parameter group (a total of 96 groups). Setting to 0 automatically selects the same number PID and setpoint parameter group. In synchronous mode (parameter AFB.2=1), it defines the channel number to follow, ensuring that the current channel's SV does not exceed the followed channel's PV plus the group parameter HYS. The hundreds and thousands digits are used in normal mode (parameter AFC.2=0) to set 1~96 to select the input channel for the PV. Setting to 0 automatically selects the same number measurement value as the control PV value. In sensor backup mode (parameter AFC.2=1), the same number measurement value is prioritized as the control PV value. However, if the same number PV is out of range or abnormal, the channel measurement value defined by the hundreds and thousands digits of the Pn parameter is automatically selected as the PV value for this channel.

		Pn01~ Pn96 Output Channel Configuration Parameter Description	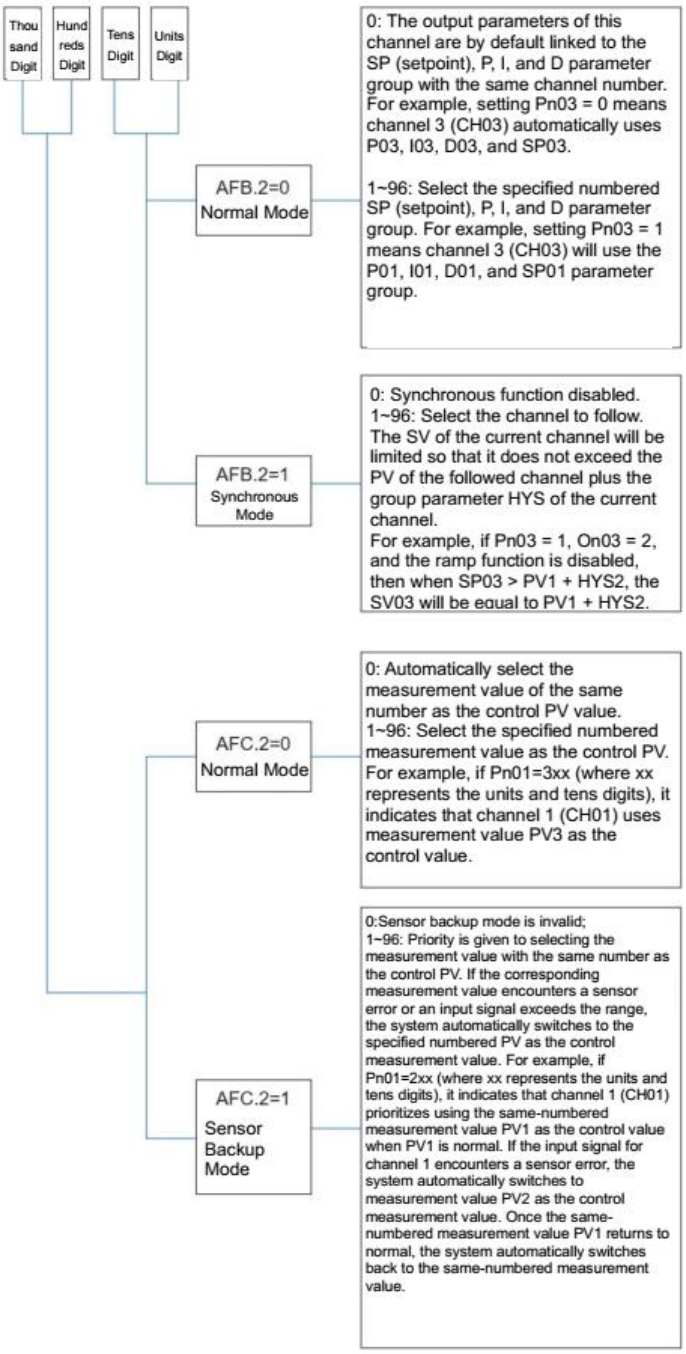

<table>
<tr><td rowspan="2">0300H~
035FH</td><td>0768~0863</td><td>At01~At96
Output Channel
Operating Mode</td><td>Setting to 0 enables APID, representing a PID control algorithm with AI functionality. Setting to 1 activates Auto-Tuning At. Setting to 2 enables ON/OFF control mode. Setting to 3 enables manual control mode. Setting to 4 stops control and disables output. Setting to 5 enables PV retransmission mode. Setting to 1XX defines a cascade control mode for the secondary controller (inner loop), where the setpoint of this channel will be defined by the parameters LA and SP as the lower and upper limits, respectively. For example, setting At10=101 means that the setpoint for channel 10 will be calculated as: Setpoint=LA10+(SP10-LA10)*OP01/25600. Note that if the measurement value PV10 is lower than LA10, the low limit alarm will still be triggered. If SP10 is smaller than LA10, cascade control will not be performed. Setting to 2XX disables PID control. The output of this channel will proportionally follow the output of channel XX, with the proportional band parameter setting the relative output proportion from 0~3200.0%. For example, setting At10=206 means that the output value for channel 10 is calculated as OP10=OP6*P10*0.1%. Here, OP10 follows the output of OP6, and the P10 value is expressed in units of 0.1%. The valid range of this function XX is 1~16. Set to 3X (where X ranges from 1~9, representing the channel number), defined as the intelligent calibration cascade control secondary mode.</td></tr>
<tr><td colspan="3">
<table>
<tr><th>AT01~AT96 Definition Description</th><th>Function</th><th>Description</th></tr>
<tr><td>0</td><td>APID Control Mode</td><td>Indicate that the channel executes APID, which is the PID control algorithm with AI functionality.</td></tr>
<tr><td>1</td><td>Auto-tuning mode</td><td>Indicates that the channel has activated the auto-tuning function.</td></tr>
<tr><td>2</td><td>Bit Control Mode</td><td>The channel executes the ON/OFF bit control mode.</td></tr>
<tr><td>3</td><td>Manual Output Mode</td><td>Switch the channel to manual mode, allowing the output size to be adjusted by modifying OPxx.</td></tr>
<tr><td>4</td><td>Stop Control</td><td>The channel stops control and disables output.</td></tr>
<tr><td>5</td><td>PV Transmission Mode</td><td>The PV value is transmitted according to the measurement range. By default, the transmission range is set to SCL and SCH. When AFC.6=1, the range switches to SPL and SPH.</td></tr>
<tr><td>1xx</td><td>Cascade Control Mode</td><td>Set to 1XX (where XX represents the channel number) to define a cascade control secondary control (inner loop) mode. The setpoint for this channel will be defined by the parameters LA and SP as the lower and upper limits, respectively. For example, setting At10=101 means the setpoint for channel 10 =LA10+(SP10-LA10)*OP01/25600. Note: If the measured value PV10 is lower than LA10, the low limit alarm will still be triggered. If SP10 is less than LA10, cascade control functionality will not be executed.</td></tr>
</table>
</td></tr>
</table>

<table>
<tr><td></td><td colspan="3">
<table>
<tr><td>2xx</td><td>Follow Output Mode</td><td>Set to 2xx, the PID control is not executed, and the output of this channel follows the output of channel XX in proportion. The proportional band parameter can be used to adjust the relative output ratio in the range of 0~3200.0%.
For example: At10=206, it indicates the output value of channel 10 is calculated as OP10 = OP6 * P10 * 0.1%, which means OP10 follows OP6 output, with P10 being expressed in units of 0.1%. The valid range for the channel number xx in this function is 1~16</td></tr>
<tr><td>3X</td><td>Intelligent Calibrated Cascade Control Mode</td><td>Set to 3X (where X ranges from 1~9, representing the channel number), defined as the intelligent calibration cascade control secondary mode (note: only heating is supported). In this mode, the secondary control proportional band setting is defined as the cascade control intensity, with a unit of 0.1%. Setting the secondary control proportional band to 0 will disable cascade control (in this case, the secondary control output equals the main control output). Its maximum setting is 120.0%. The secondary control SP parameter and integral parameter are self-learning parameters for the secondary control (they will adjust automatically during use). For initial use, you can refer to similar devices for direct input, which can speed up the control system’s adaptation process. The secondary control derivative parameter defines the learning style of the secondary control. It is generally recommended to set this to 50.00. Increasing this value can reduce overshoot, while decreasing it can shorten the heating time, though some overshoot may occur.</td></tr>
</table>
</td></tr>
<tr><td>0360H~03BFH</td><td>0864~0959</td><td>OP01~OP96 Output Channel Output Value</td><td>In automatic mode, this channel is read-only and represents the PID control output value (for ON/OFF control, 0 means off and 25650 means on). In manual mode, this channel is both readable and writable, and the written value can serve as the manual output control value. The value 25600 indicates 100% output.</td></tr>
<tr><td>03C0H~041FH</td><td>0960~1055</td><td>HA01 ~HA96 Multifunctional Parameter 1</td><td>Setting range: -9990~32000. By default, it functions as a high limit alarm, but it can be redefined for other functions via AFA.</td></tr>
<tr><td>0420H~047FH</td><td>1056~1151</td><td>LA01~LA96 Multifunctional Parameter 2</td><td>Setting range: -9990~32000. By default, it functions as a low limit alarm, but it can be redefined for other functions via AFA.</td></tr>
</table>

5.2 Input Parameter Group

Used to set four groups of input specifications, input upper and lower limits, input filtering, etc. The input channel can use input parameter groups 1-4 through the In parameter.

For input specifications, parameters need to be distinguished by IN parameters. Channels 1 and 2 are K-type thermocouple inputs, while channels 3 and 4 are S-type thermocouple inputs. In this case, you can set In1=1, In2=1, In3=2, and In4=2; this means channels 1 and 2 use input parameter group 1, and channels 3 and 4 use input parameter group 2. Then, set INP1=0 for K-type thermocouple and INP2=1 for S-type thermocouple.

<table>
<tr><th>Address Code</th><th>Register</th><th>Parameter Name</th><th>Functional Description</th></tr>
<tr><td>0800~
0803H</td><td>2048~2051</td><td>InP1~4;
Input Specification Definition</td><td>This parameter is one of the input group parameters and is used to select the input specification. It needs to match the corresponding module. For example, the thermocouple input module must be set to thermocouple as the input specification. There are 4 sets of input parameters in total, each including 4 parameters: InP, ScL, ScH, and FIL.
InP is used to select the input specification whose value corresponds to the following:
<table>
<tr><td>0 K</td><td>22 Pt100 (-200.00~+300.00℃)</td></tr>
<tr><td>1 S</td><td>23 Pt1000 (-200.00~+300.00℃) (J0/J2)</td></tr>
<tr><td>2 R</td><td>24 0~2000 ohm resistor input (J0/J2)</td></tr>
<tr><td>3 T</td><td>25 0~75mV voltage input</td></tr>
<tr><td>4 E</td><td>27 0~320 ohm resistor input</td></tr>
<tr><td>5 J</td><td>28 0~20mV voltage input</td></tr>
<tr><td>6 B</td><td>29 0~50mV voltage input
0~20A AC current input
(J9 paired with a dedicated current transformer)</td></tr>
<tr><td>7 N</td><td>33 1~5V voltage input (J3)</td></tr>
<tr><td>8 WRe3-WRe25</td><td>34 0~5V voltage input (J3)</td></tr>
<tr><td>9 WRe5-WRe26</td><td>35 -10~+10mV</td></tr>
<tr><td>12 F2 radiation high-temperature thermometer</td><td>36 -37.5~+37.5mV voltage input</td></tr>
<tr><td>13 T (0~300.00℃)</td><td>38 10~50mV voltage input</td></tr>
<tr><td>17 K (0~300.00℃)</td><td>39 15~75mV voltage input</td></tr>
<tr><td>18 J (0~300.00℃)</td><td>42 0~10V (J3)</td></tr>
<tr><td>19 Ni120</td><td>43 2~10V (J3)</td></tr>
<tr><td>20 Cu50</td><td>50 0-20mA (J4)</td></tr>
<tr><td>21 Pt100</td><td>51 4-20mA (J4)</td></tr>
</table></td></tr>
<tr><td>0804H~
0807H</td><td>2052~2055</td><td>ScL1~4 Linear Input Calibration Lower Limit Value</td><td>Define the lower limit of the linear input scale, with units the same as the measured value.</td></tr>
<tr><td>0808H~
080BH</td><td>2056~2059</td><td>ScH1~4
Scale upper limit value</td><td>Define the upper limit of the linear input scale, with units the same as the measured value.</td></tr>
<tr><td>080CH~
080FH</td><td>2060~2063</td><td>FIL1~4
Digital Filtering</td><td>Define the intensity of digital filtering for the input. A setting of 0 means no filtering, 1 represents median value filtering, and values greater than 2 represent integration filtering. The unit is the sampling period.</td></tr>
</table>

5.3 Output Parameter Group

Used to set four groups of deviation alarms, alarm function selection, output upper and lower limits, heating/cooling slope, and setpoint upper and lower limits. The input channel can use output parameter groups 1-4 via the On parameter.

If the output upper limit needs to be distinguished by the ON parameter, with channels 1 and 2 requiring OPH=50, and channels 3 and 4 requiring OPH=60, you can set On1=1, On2=1, On3=2, and On4=2; this means channels 1 and 2 use output parameter group 1, while channels 3 and 4 use output parameter group 2. Then, set OPH1=50 and OPH2=60.

<table>
<tr><th>Address Code</th><th>Register</th><th>Parameter Name</th><th>Functional Description</th></tr>
<tr><td>0810H~0813H</td><td>2064~2067</td><td>dHA1~4 Alarm Parameters</td><td>The default is positive deviation alarm, but it can also be defined as an high limit alarm. This is one of the output group parameters. The output parameter group can either select the same numbered parameter group as the input or choose a different parameter group. The instrument has a total of 4 sets of output parameters.</td></tr>
<tr><td>0814H~0817H</td><td>2068~2071</td><td>dLA1~4 Alarm Parameters</td><td>The default is negative deviation alarm, but it can also be defined as a low limit alarm.</td></tr>
<tr><td>0818H~081BH</td><td>2072~2075</td><td>AAF1~4 Alarm Function Selection</td><td>AAF.0~AAF.4 select whether the input fault, HA alarm, LA alarm, dHA, and dLA alarms will be automatically reset or not. If set to 1, the alarm will not be automatically reset, and the customer needs to send a write command to clear the corresponding alarm status register to release the alarm action.</td></tr>
<tr><td>0818H~081BH</td><td colspan="3">
<table>
<tr><th>AAF Detailed Explanation</th><th>Description</th></tr>
<tr><td>Bit0</td><td>0: The alarm status automatically resets after the input signal error is cleared.
1: The alarm status does not automatically reset after the input signal error is cleared. To manually reset, write 0 to the corresponding bit of the alarm status parameter for the corresponding channel. For odd-numbered channels, write bit8=0 in the alarm status; for even-numbered channels, write bit0=0.</td></tr>
<tr><td>Bit1</td><td>0: The alarm status automatically resets after the HA alarm is cleared.
1: The alarm status does not automatically reset after the HA alarm is cleared. To manually clear the alarm, write 0 to the corresponding bit in the alarm status parameter for the respective channel. For odd-numbered channels, write bit9=0 in the alarm status; for even-numbered channels, write bit1=0.</td></tr>
<tr><td>Bit2</td><td>0: The alarm status automatically resets after the LA alarm is cleared.
1: The alarm status does not automatically reset after the LA alarm is cleared. To manually clear the alarm, write 0 to the corresponding bit in the alarm status parameter for the respective channel. For odd-numbered channels, write bit10=0 in the alarm status; for even-numbered channels, write bit2=0.</td></tr>
</table>
</td></tr>
</table>

	Bit3	0: The alarm status automatically resets after the dHA alarm is cleared. 1: The alarm status does not automatically reset after the dHA alarm is cleared. To manually clear the alarm, write 0 to the corresponding bit in the alarm status parameter for the respective channel. For odd-numbered channels, write bit11=0 in the alarm status; for even-numbered channels, write bit3=0.	
	Bit4	0: The alarm status automatically resets after the dLA alarm is cleared. 1: The alarm status does not automatically reset after the dLA alarm is cleared. To manually clear the alarm, write 0 to the corresponding bit in the alarm status parameter for the respective channel. For odd-numbered channels, write bit10=0 in the alarm status; for even-numbered channels, write bit4=0.	
	Bit5~bit7	Spare	
081CH~081FH	2076~2079	HYS1~4 Hysteresis	The unit is the same as the measurement value. It is used as the hysteresis for alarms, ON/OFF control, and PID auto-tuning. However, auto-tuning can also use EHYS as the hysteresis by selecting it in Act.1.
0820H~0823H	2080~2083	OPL1~4 Output Lower Limit	Setting range 0~100, default as output lower limit. It can also be defined as the output value in the event of input faults/overload.
0824H~0827H	2084~2087	OPH1~4 Output Upper Limit	Setting range: 0~105, used as the output upper limit.
0828H~082BH	2088~2091	OHE1~4 Segmented Power Limit Setting	OPH valid range, with the same unit as the measurement value. This is used to implement the segmented output limit function. When the measurement value is less than OHE, the output is limited by OPH. When the measurement value exceeds OHE, the output is not limited, i.e., it is 100%.
082CH~082FH	2092~2095	Act1~4 Control Function Selection	Act.0: Set to 0 for reverse action (heating), or 1 for direct action (cooling). Act.1: Set to 0 for using the HYS value of this parameter group as the hysteresis for auto-tuning and ON/OFF control; set to 1 to use the global parameter EHYS as the hysteresis. Act.2: Set to 0 to force the output to 0 when an input fault occurs on this channel; set to 1 to force the output to OPL when an input fault occurs. Act.3: Set to 0 to define the output lower limit as OPL; set to 1 to fix the output lower limit at 0. Act.4: Set to 1 to force the output to the input fault state when a HA alarm occurs.

	<table><tr><th>ACT Detailed Explanation</th><th>Description</th></tr><tr><td>Bit0</td><td>0: Reverse action mode (heating control) 1: Direct action mode (cooling control).</td></tr><tr><td>Bit1</td><td>0: The At auto-tuning and (ON/OFF) bit control use the HYS value of this parameter group as the hysteresis. For example, if On01 = 2, then the hysteresis value for channel 2 will use HYS2. 1: The At auto-tuning and (ON/OFF) bit control use the global parameter EHYS as the hysteresis</td></tr><tr><td>Bit2</td><td>0: When an input fault occurs on this channel, the output will be forced to 0 1: When an input fault occurs, the output will be forced to OPL</td></tr><tr><td>Bit3</td><td>0: When an input fault occurs, the output will be forced to OPL 1: The output lower limit will be fixed at 0</td></tr><tr><td>Bit4</td><td>0: The output will not be affected during the HA alarm 1: During the HA alarm, the output will also be forced to the same state as the input fault condition.</td></tr><tr><td>Bit5~bit7</td><td>Spare</td></tr></table>		
0830H~0833H	2096~2099	Srh1~4 Heating Slope Limit Value	Indicate the heating rate in degrees per minute. A value of 0 means no limit. When the SP value changes, the rate of change will be limited. Upon initial power-up or when control is started, the current measured value PV will be automatically set as the initial setpoint value. Additionally, if set AFC.3=1, any modification to the setpoint value SPXX will also automatically use the current measured value PV as the initial setpoint. Note this function does not apply to secondary control channels in cascade control mode. Note that the control cycle CTI value should be divisible by 60.0, such as 0.5, 0.8, 1.0, 1.2, 1.5, 2.0 seconds, etc. If other values are set, such as 0.9 or 1.1 seconds, there will be calculation errors in the heating slope value.
0834H~0837H	2100~2103	SrL1~4 Cooling Slope Limit Value	Indicate the cooling rate in degrees per minute. A value of 0 means no limit. The usage is the same as the Srh parameter.
0838H~083BH	2104~2107	SPL1~4 Setpoint Lower limit	Belong to the output configuration parameter group, used to set the lower limit of the setpoint for channels 1~4. Note that it only restricts the range of the actual set value SV and does not limit the setting range for the setpoint SP.
083CH~083FH	2108~2111	SPH1~4 Setpoint Upper Limit	Belong to the output configuration parameter group, used to set the upper limit of the setpoint for channels 1~4. Note that it only restricts the range of the actual set value SV and does not limit the setting range for the setpoint SP.

5.4 Global Parameters

Used to set global parameters such as the module's communication address, baud rate, number of input channels, and output cycle.

Address Code	Register	Parameter Name	Functional Description
0840H	2112	Addr Communication Address	Define the communication address of this device, with a range of 0~88.
0841H	2113	bAud Communication Baud Rate	Define the baud rate, the unit is 0.1K, setting range: 9.6K~115.2K.
0842H	2114	Adn number of input loops for this device	Define the number of input channels for this device.
0843H	2115	ACH Extended Input Channel Count	If the communication input interface of the device's expansion module fails to receive sufficient measurement values from the input modules defined by ACH, a corresponding input fault alarm signal will be triggered. If the actual input exceeds the set value, it is meaningless. This parameter is only used to define the communication input alarm prompt range and does not disable the measurement channel. To disable the measurement channel, the In parameter should be set.
0844H	2116	Ctn Control Channel Count	Indicate the number of control channels enabled. Each control channel occupies 10ms of processing time. If set to 32, the actual control cycle will be at least 0.32 seconds.
0845H	2117	Srun Run/Stop Selection	Normally, the instrument operates in automatic control mode, but each channel can independently set the At parameter to turn off. If Srun is set to 9655, all PID channels will stop control output, and one command shutdown can be realized. If Srun is set to 15, the control mode remains active; however, when the power is turned off and then back on, the system will automatically enter the 9655 global stop state.
0846H	2118	Ctl Control Cycle	Define the control cycle, with a range of 0.0~50.0 seconds. 0.0 is the system's minimum achievable cycle. For example, if the total number of control loops Ctn=16, the actual execution control cycle will be 0.16 seconds, meaning the Ctl cannot be less than 0.16. If Ctl is modified, the instrument must be restarted.
0847H	2119	ALAL Alarm Common Output Configuration (requires external alarm module expansion)	ALAL.0~4 define whether input fault, HA alarm, LA alarm, dHA, and dLA alarms will be output as a common alarm. Set to 0 for no output; set to 1 for output. Any alarm will trigger the global common alarm output AL0 action. The global common alarm output requires the alarm output terminal to be installed on the host.

0848H	2120	ALCH Alarm Independent Output Range Configuration (requires external alarm module expansion)	Define the start and end numbers of the independent alarm output channels for expansion. Although up to 5*97 alarm signals can be generated, note that the maximum number of extended alarm output channels is 256. For instance, if each channel requires 4 independent alarms, the difference between the output channel end number and the output channel start number should not exceed 64.
0849H	2121	ALbt Alarm Independent Output Configuration	ALbt.0~4 define whether input fault (including over-range, open circuit, communication disconnection, etc.), HA alarm, LA alarm, dHA, and dLA alarms are output. Set to 0 for no output; set to 1 for output. For example, if ALAL = 7, ALbt = 3, and ALCH = 16, the extended alarm output module will output 3 common alarms and 32 independent alarm signals. The output terminal numbers 1~3 will correspond to the common input alarm, high limit alarm, and low limit alarm; terminals 4~7 will sequentially correspond to channel 1 input error alarm, channel 1 HA alarm, channel 2 input error alarm, channel 2 HA alarm, and so on. For another example, if ALAL = 0, ALbt = 31, and ALCH = 616, the system will output 55 alarm signals, with 5 alarms for each of channels 6~16.
084AH	2122	AFA Function Parameter Configuration A	AFA.0: Set to 0 for HA as the default high limit alarm, or 1 for positive deviation alarm. AFA.1: Set to 0 for LA as the default lower limit alarm, or 1 for negative deviation alarm. AFA.2: Set to 0 for dHA as the default positive deviation alarm, or 1 for high limit alarm. AFA.3: Set to 0 for dLA as the default negative deviation alarm, or 1 for low limit alarm. AFA.4: Set to 0 for LA as the default low limit alarm, or 1 for high limit alarm (this adds an additional high limit alarm). AFA.5: Set to 0 for HA and LA alarms to correspond to input channels, or 1 for HA and LA alarms to correspond to output channels (Note: do not use HA and LA as deviation alarms in this mode). AFA.6: Set to 0 for AL1 to be defined according to ALAL, or 1 for AL1 to be a global alarm AFA.7: Set to 0 for AL2 to be defined according to ALAL, or 1 for AL2 to be a global alarm

084BH	2123	AFB Function Parameter Configuration B	When AFB.1=0, the PID group operates in common mode. When AFB.1=1, the instrument switches to a mode with 5 preset PID groups for automatic switching. In this mode, the maximum number of independent PID control channels is 16. The instrument divides the SV and PID parameter groups into 16*6 groups. Groups 1~16 correspond to the PID parameters currently used by channels 1~16. The following 80 PID groups are arranged in 5 sets for each channel, meaning each channel can preset up to 5 sets of PID parameters that automatically switch according to the current SP value. For example: If SP1 is less than SP17, P1, I1, and d1 are automatically set to P17, I17, and d17. If SP1 is greater than SP17 but less than SP18, P1, I1, and d1 are automatically set to P18, I18, and d18. If SP1 is greater than SP18 but less than SP19, P1, I1, and d1 are automatically set to P19, I19, and d19, and so on. AFB.2=0, Normal Mode AFB=1, synchronization mode: the units and tens digits of parameter Pn are used to set the channel number to follow, ensuring that the current channel's SV does not exceed the PV of the target channel plus the HYS of its own group.
084CH	2124	AFC Function Parameter Configuration C	AFC.0: Select communication parity bit. Set to 0 for no parity, or 1 for even parity. AFC.1=0: Choose linear output as 4~20mA or 2~10V; AFC.1=1: Choose current output as 0~20mA or 0~10V. AFC.2=0: No sensor backup function; AFC.2=1: Sensor backup function enabled. AFC.3=0: When using slope control, changes in the setpoint do not trigger the measurement value startup (PV START) function; AFC.3=1: When using slope control, changes in the setpoint trigger the measurement value startup function. Note that when using this function, the maximum number of control channels should not exceed 4. AFC.4=0: ADC converter provides better resistance to interference from a 50Hz power grid; AFC.4=1: ADC converter provides better resistance to interference from a 60Hz power grid. This setting is only applicable for countries using a 60Hz power grid. AFC.5=0: 0851H address master host status BIT0~BIT7 port status mode, where 1 indicates an output action and 0 indicates no action; AFC.5=1: 0851H address master host status BIT0~BIT7 port 0 indicates an action, and 1 indicates no action. AFC.6=0: the transmitter output scale is defined by the corresponding SCL and SCH; AFC.6=1: the transmitter output scale is defined by the corresponding SPL and SPH. AFC.7=0: When an expansion module, such as YL-1016, is connected, output values are transmitted; AFC.7=1: When an host is connected, PV measurement values are transmitted.
084DH	2125	Nonc	Nonc.0~5: Define the output as normally open (NO) or normally closed (NC) for input fault, HA alarm, LA alarm, dHA alarm, dLA alarm, and common alarm, respectively. 0: Normally open (closes when an alarm occurs). 1: Normally closed. Note that if the system is powered off, the relay is disconnected regardless of the settings.

084EH	2126	EAF host sampling parameter configuration; note that this is only valid for the host's sampling rate. The sampling rate of the extended input module is configured by the extension module itself.	EAF=0: The main input refresh rate is automatically selected based on the CTI control cycle parameter. For thermocouples and voltage/current inputs, the fastest rate is 20ms per channel; for RTD, it is 80ms per channel. EAF=1, the refresh rate is approximately 20mS per channel, and for RTD inputs, it is approximately 80mS per channel. EAF=2, the refresh rate is approximately 40mS per channel, and for RTD inputs, it is approximately 160mS per channel. EAF=3, the refresh rate is approximately 10mS per channel, and for RTD inputs, it is approximately 80mS per channel. Note: The number of channels is set to 1, with a maximum refresh rate of 20mS.
084FH	2127	EHYS Additional Hysteresis	If a different hysteresis value is required for auto-tuning and ON/OFF control compared to the HYS alarm hysteresis, EHYS can be selected as the hysteresis value for auto-tuning and ON/OFF control through Act.1.
0850H	2128	dPt Decimal Point Position	The data range is 0~3, set the display decimal point position of the host operation panel. This setting is only for the convenience of displaying values on the basic operation panel and does not affect the data read by the host computer, the host computer program can handle the decimal point display by itself.
0852H	2130	Loc Parameter Lock	When Loc.5 is set to 0, all parameters can be written; when set to 1, writing parameters in the range of 0800H~08FFH is not allowed. Loc.6, when set to 0 and 1, respectively, indicates whether single-byte write commands are allowed or not. Loc.7, when set to 0 and 1, respectively, indicates whether multi-byte write commands are allowed or not. When writing is not allowed, the instrument will still return the command but will not actually modify the parameter.
0856H	2134	OPCH Output Start Channel	OPCH local output start channel of this device: When set to 1, output 1 corresponds to channel 1. If set to 5, output 1 corresponds to the output value OP5 of channel 5. This function is used when channels 1~4 are only used for calculations and do not directly output.
0857H	2135	FL32 High-Resolution Measurement Filtering Constant	The unit is the sampling period, with a setting range of 0~999. This parameter applies high-resolution secondary filtering to the 32BIT data of 8 channels, improving the stability of the displayed data. This filtering does not apply to PID regulation. Typically, the workpiece being heated has a larger mass-to-volume ratio than the temperature sensor, so its thermal conductivity is slower than the sensor's response. By properly setting this filtering parameter, a more accurate representation of the actual internal temperature of the heated workpiece can be obtained.
0858H	2136	AIF1 Heating and Overshoot Adjustment Parameter 1	Used by the manufacturer's debugging personnel

0859H	2137	AIF2 Heating and Overshoot Adjustment Parameter 2	Used by the manufacturer's debugging personnel
085AH	2138	P1FA First Slice Start Threshold	Used by the manufacturer's debugging personnel In some versions, this address parameter is still named as AIF3.
085BH	2139	dIFA	Used by the manufacturer's debugging personnel
085CH	2140	SPSr	Used by the manufacturer's debugging personnel
085DH	2141	AtFn	The At auto-tuning style parameter has a default factory setting of 55. When the difference between the PV and SV register values exceeds 600, a fast tuning mode is used, which requires only one heating cycle to determine the PID parameters (when INP = 13/17/18/22/35/36, the difference is 2000). When the difference is smaller, conventional auto-tuning is performed, requiring two heating and cooling cycles to complete. In the old version, the cutoff point was at SV, while in the new version, the cutoff point is slightly earlier. The tens digit of the AtFn parameter is used to adjust the size of the auto-tuning proportional band, with a range from 0~9. A larger number results in a larger proportional band for the auto-tuning. The ones digit is used to adjust the rate of heating, either faster or smoother. It will adjust the PID parameters accordingly, larger numbers are suitable for smoother heating, while smaller numbers result in more aggressive heating. If set to 10XX, where the thousands digit is 1, conventional auto-tuning will be forced.
085EH	2142	AIFL	Used by the manufacturer's debugging personnel In some versions, this address parameter is still named as P1Pr.
085FH	2143	P1TI	Used by the manufacturer's debugging personnel
		OPSn	Used by the manufacturer's debugging personnel

6. Frequently Used Functions Settings

6.1 Run and Stop

After the module is powered on, it enters automatic operation status. Each channel's running and stopping status can be set independently via the At parameter, or all channels can be set to running or stopped simultaneously with a single command using the Srun parameter.

Parameter	Setting Values	Description
At01~At96	0: PID automatic control mode; 4: Stop mode	Only applies to their respective channels
Srun	0: All channels in automatic control mode; 15: Automatic control mode, after a power outage and restart, all channels switch to stop mode. 9655: All channels enter stop mode	Applies to all channels

6.2: Auto-tuning

The module features auto-tuning capabilities and can automatically calculate optimal PID parameters based on operating conditions. By default, it uses a fast tuning mode, requiring only a single heating cycle to determine the PID parameters. Before auto-tuning, be sure to set the input specifications, hysteresis, control cycle, and setpoint.

Parameter	Setting Values	Description
At01~At 96	1: Enable auto-tuning	Enable channel auto-tuning
AtFn	55: Default value. When the difference between the PV and SV register values is greater than 600 (when INP=13/17/18/22/35/36, the difference must be greater than 2000), fast auto-tuning is used, and PID parameters can be obtained in just one heating cycle. If the difference is less than this, conventional auto-tuning will be performed. The tens digit is used to adjust the size of the auto-tuning proportional band, with a range from 0~9. A larger number results in a larger proportional band for the auto-tuning. The ones digit is used to adjust the rate of heating, either faster or smoother. It will adjust the PID parameters accordingly, larger numbers are suitable for smoother heating, while smaller numbers for fast heating.	Set module auto-tuning style
	10XX: If the thousands digit is 1, conventional auto-tuning is forced, and PID values are obtained after two heating cycles.	

6.3 Alarm Settings

After installing the alarm module, the device itself provides two alarm output points, A1 and A2. Additional external alarm modules can be added to achieve more alarm output points. For detailed parameter explanations, please refer to sections 5.3 and 5.4.

Parameter	Setting Values	Description
HA01~HA96	-9990~32000	High Limit Alarm
LA01~LA96	-9990~32000	Low Limit Alarm
dHA1~dHA4	-9990~32000	Positive Deviation Alarm
dLA1~dLA4	-9990~32000	Negative Deviation Alarm
AAF1~4	0~-255	Used to set whether to automatically reset after an alarm
HYS1~4	-9990~32000	Used to set the alarm hysteresis
ALAL	0~255	Used to define whether input error alarm, HA alarm, LA alarm, dHA, and dLA alarms are output as a common alarm. When enabled, any channel alarm will trigger the common alarm output.
ALCH	AABB: AA represents the starting channel number, and BB represents the ending channel number	An external expansion alarm module is required. ALCH can define the starting and ending numbers of the independent alarm output channels for expansion; ALbt can define the independent alarm output content. For example, if ALAL = 7, ALbt = 3, and ALCH = 16, the extended alarm output module will output 3 common alarms and 32 independent alarm signals in 16 channels. The output terminal numbers 1~3 will correspond to the common input alarm, high limit alarm, and low limit alarm; terminals 4~7 will sequentially correspond to channel 1 input error alarm, channel 1 HA alarm, channel 2 input error alarm, channel 2 HA alarm, and so on.
ALbt	0~255	

AFA	0~255	Used to define alarm type switching and output action types
nonc	0~255	Used to define whether the alarm point is normally open or normally closed. The first 5 bits of NONC correspond to the first 5 bits of the ALAL parameter. As long as the corresponding alarm bit in the NONC parameter is set to 1, the alarm will be inverted, and the action will also be inverted.

The ALAL parameter settings of this device and the corresponding actions of A1/A2 positions are as shown in the table below:

Bit 0 Input Exception	Bit 1 HA	Bit 2 LA	Bit 3 dHA	Bit 4 dLA	AL1	AL2	AL
1	0	0	0	0	ON when input exception alarm is triggered	Always OFF	ON for any alarm
0	1	0	0	0	ON when HA alarm is triggered	Always OFF	ON for any alarm
1	1	0	0	0	ON when input exception alarm is triggered	ON when HA alarm is triggered	ON for any alarm
0	0	1	0	0	ON when LA alarm is triggered	Always OFF	ON for any alarm
1	0	1	0	0	ON when input exception alarm is triggered	ON when LA alarm is triggered	ON for any alarm
0	1	1	0	0	ON when HA alarm is triggered	ON when LA alarm is triggered	ON for any alarm
1	1	1	0	0	ON when input exception alarm is triggered	ON when HA alarm is triggered	ON for any alarm
0	0	0	1	0	ON when dHA alarm is triggered	Always OFF	ON for any alarm
…	…	…	…	…	…	…	ON for any alarm
…	…	…	…	…	…	…	ON for any alarm
1	1	1	1	1	ON when input exception alarm is triggered	ON when HA alarm is triggered	ON for any alarm

6.4 Output Channel PID and Measurement Channel Selection Function

Parameter	Setting Values	Description
Pn01~ Pn96	0~9999	When hot backup and synchronization modes are not enabled, the units and tens digits can be set from 1 to 96 to select the PID and setpoint (SP) parameter group. If set to 0, the PID and setpoint parameter group with the same number is automatically selected. In normal mode, the hundreds and thousands digits can be set from 1 to 96 to select the PV input channel. If set to 0, the measured value with the same number is automatically selected as the control PV value

6.5 Synchronization Function

The synchronization function allows the SV value of a channel to follow the PV value of the target channel. By setting an appropriate HYS value, multi-channel synchronized heating can be achieved.

Parameter	Setting Values	Description
AFB	AFB.2=1 means setting bit 2 of the binary value to 1, which makes AFB=4: this enables the synchronization function.	The units and tens digits of parameter Pn are used to set the channel number to follow, ensuring that the current channel's SV does not exceed the PV of the target channel plus the HYS of its own group.
Pn01~ Pn96	XX: Set the units and tens digits to the channel numbers that need to be followed.	After enabling the synchronization function, for example: if Pn03=1, then SV03 will not exceed PV01+HYS, where HYS is the hysteresis of its own output parameter group. For example, if SP03=200°C, PV01=20°C, and HYS=2°C, then SV03=22°C at this time.

6.6 Sensor Backup Function

When the hot backup function is enabled, if there is a problem with the sensor wiring of its own channel, it can automatically switch to another sensor.

Parameter	Setting Values	Description
AFC	AFC.2=1 Enable hot backup function	For example, if AFC is set to 4 and hot backup is enabled, the hundreds and thousands digits of Pn become the channel number that needs hot backup. When its own channel enters ORAL, PID calculation will be performed based on the PV of the hot backup channel. When AFC=0, the hundreds and thousands digits of Pn function as before, used to select the PV for PID calculation.
Pn01~Pn96	XX: Set the units and tens digits to the channel number to be followed, ranging from 0 to 9999.	After enabling the hot backup function, for example: if Pn03=100, then after PV3 enters the ORAL state, the PID algorithm for channel 3 will use PV1 and SV3 for calculation.

6.7 Cascade Control Function

Cascade control is designed for systems with large lag. On the basis of single-loop PID control, an additional measurement point is added, which generally responds faster. For example, in a jacketed system where the temperature inside the jacket needs to be controlled but the lag is too great, an additional measurement point can be added outside the jacket. The measurement point to be controlled is usually called the main control (outer loop), and the additional measurement point is called the secondary control (inner loop). Intelligent calibrated cascade is generally preferred.

Main parameters for intelligent calibrated cascade:

Parameter	Setting Values	Description
At01~At96	In the secondary control (inner loop), set 3x to enable the intelligent calibrated cascade function, where x represents the channel number of the inner loop	If the first channel is the main control and the second channel is the secondary control, set At2 to 31, and connect the output wiring to the secondary control O2. Once the logic is confirmed correct, set At1 to 1 to perform cascade auto-tuning.

Main parameters for manual calibrated cascade:

Parameter	Setting Values	Description
At01~At96	In the secondary control (inner loop), set 1xx to enable the manual calibrated cascade function, where x represents the channel number of the inner loop	If the first channel is the main control and the second channel is the secondary control, set At2 to 101. The manual calibration lower limit is LA02, the upper limit is SP02, and the secondary control setpoint SV2=LA02+OP01/25600* (SP02-LA02). Connect the output wiring to the secondary control O2. For auto-tuning, first tune the secondary control (At2=1). After tuning, set At2 to 101 and tune the main control (At1=1).
LA01~LA96	The original lower limit alarm is used as the calibration lower limit in manual calibrated cascade. -9990~32000	
SP01~SP96	The original setpoint is used as the calibration upper limit in manual calibrated cascade. -9990~32000	

6.8 Slope Function

Allows SV to change from the current value (or PV) to SP at a certain slope.

Parameter	Setting Values	Description
SP01~SP96	-9990~32000	Setpoint
SV1~SV96	-9990~32000	PID Actual Setpoint, in the ordinary fixed-point temperature control mode, this is simply equal to SP1~SP96. Note that in modes with heating/cooling slope control or secondary control mode in cascade control, it is not equal to SP1~SP96. When the heating/cooling slope limit function is available, the start setpoint can be defined by writing this parameter. At the same time, by inputting data for multiple channels , synchronized heating and cooling curves for multiple channels can be achieved.
Srh1~4	0~32000	Heating slope limit value, indicate the heating rate in degrees per minute. A value of 0 means no limit. When the SP value changes, the rate of change will be limited. Upon initial power-up or when control is started, the current measured value PV will be automatically set as the initial setpoint value. Additionally, if set AFC.3=1, any modification to the setpoint value SPXX will also automatically use the current measured value PV as the initial setpoint. Note this function does not apply to secondary control channels in cascade control mode. Note that the control cycle CTI value should be divisible by 60.0, such as 0.5, 0.8, 1.0, 1.2, 1.5, 2.0 seconds, etc. If other values are set, such as 0.9 or 1.1 seconds, there will be calculation errors in the heating slope value.

SrL1~4	0~32000	Cooling slope limit value, indicate the cooling rate in degrees per minute. A value of 0 means no limit. The usage is the same as the Srh parameter.
AFC	AFC.3=1	For example, when AFC=8, if the setpoint SPXX is modified, SVXX becomes PVXX, and then continues to change toward SPXX at the set rate. If AFC=0, this function is not enabled.

6.9 Input Nonlinear Correction Function

Parameter	Setting Values	Description
IN01~96	A*10 + B, where A represents starting from Dx, and B indicates which one of INP1~4 to use.	If IN01=12, it means the nonlinear table starts from D1, and the input specification corresponds to INP2.
D1~D100	-999.0~3276.0	Used to implement multi-point correction. There are two types of calibration tables. For example, when IN1=11, it means the calibration table is defined starting from D1: The first type of table: D1 corresponds to the starting value, D2 to the full scale, and D3 to the segment range. Assuming the input is temperature, D1=0, D2=1000.0, and D3=500.0, the first correction point is at 0°C, with subsequent points added at 500°C increments. D4 corresponds to the correction value at 0°C, D5 at 500°C, and D6 at 1000°C. The second type of table: the starting point D1 is set to 325xx, where xx is the number of correction points, followed by xx measured values and their corresponding corrected values. For linear input, conversion according to the range is required. For example, if D1=32504, then D2~D5 are the four temperatures to be corrected, and D6~D9 are the corresponding corrected display values. D2 and D5 should include the maximum and minimum temperature range used. If the values of D2~D5 exceed this range, the instrument will report an overrange error.

First Calibration Method

This correction method is suitable when the correction points are evenly distributed across the entire range. For example, if the overall measurement range is 0~300°C, and the correction points are: 50 to be corrected to 51, 100 to 99.8, and 150 to 150.5. That is, the starting value is 0, the full scale is 300, and the segment range is 50.

If setting starts from d1, then d1=starting value 0, d2=full scale 300, d3=segment range 50, and the subsequent values correspond in order to the corrected values for 0, 50, 100, 150, 200, 250, and 300°C. If the input is a common sensor, set the value directly as the temperature.

Namely

	Temperature	Register value
d1	0	0
d2	300	3000
d3	50	500
d4	0	0
d5	51	510
d6	99.8	998
d7	150.5	1505
d8	200	2000
d9	250	2500
d10	300	3000

If the input is linear, conversion according to the range is required. For example, if SCL=0, SCH=1000, and the register full scale is calculated as 20000, the following formula can be used: Register value = (PV-SCL)/ (SCH-SCL) *20000

Original temperat ure		Register value
0	d1	0
300	d2	6000
50	d3	1000
0	d4	0
51	d5	1020
99.8	d6	1996
150.5	d7	3010
200	d8	4000
250	d9	5000
300	d10	6000

Second Calibration Method

Suppose the customer needs to correct errors at 100°C and 215°C, with a maximum measurement range of 0~300°C. Suppose 100°C needs to be corrected to 101°C, and 215°C to 214°C. It is difficult to calculate using the old table, so with the new table, four correction points need to be set. (In this example, 0°C and 300°C do not need correction, but to ensure the measurement range, they must be set)

If setting starts from d1, for common sensor input types such as K or PT100, set the temperature directly after processing with decimals.

d1=32504 corresponds to the new multipoint correction table, with corrections made at four points.

	Original display value	Register value
d02	0	0
d03	100	1000
d04	215	2150
d05	300	3000

	Original display value	Register value
d06	0	0
d07	101	1010
d08	214	2140
d09	300	3000

When the input is linear, conversion according to the range is required. For example, if SCL=0, SCH=1000, and the register full scale is calculated as 20000, the following formula can be used: Register value = (PV-SCL)/ (SCH-SCL) *20000.

d1=32504 corresponds to the new multipoint correction table, with corrections made at four points.

Original display value		Register value
0	d02	0
100.0	d03	2000
215.0	d04	4300
300.0	d05	6000

Value after correction		Register value
0	d06	0
101.0	d07	2020
214.0	d08	4280
300.0	d09	6000

6.10 Multiple PID Functions

You can automatically switch the current PID parameters based on the SP. Before enabling this function, you should first adjust and test the required PID values for different temperature ranges. Once enabled, the corresponding PID for each range will be automatically written to the current PID address.

Parameter	Setting Values	Description
AFB Function Parameter Configuration B	Enable multiple PID groups when AFB.1=1, i.e., when AFB=1.	When AFB.1=0, the PID group operates in common mode. When AFB.1=1, the instrument switches to a mode with 5 preset PID groups for automatic switching. In this mode, the maximum number of independent PID control channels is 16. The instrument divides the SV and PID parameter groups into 16*6 groups. Groups 1~16 correspond to the PID parameters currently used by channels 1~16. The following 80 PID groups are arranged in 5 sets for each channel, meaning each channel can preset up to 5 sets of PID parameters that automatically switch according to the current SP value. For example: If SP1 is less than SP17, P1, I1, and d1 are automatically set to P17, I17, and d17. If SP1 is greater than SP17 but less than SP18, P1, I1, and d1 are automatically set to P18, I18, and d18. If SP1 is greater than SP18 but less than SP19, P1, I1, and d1 are automatically set to P19, I19, and d19, and so on.

6.11 Bit Control and Manual Output Function

Parameter	Setting Values	Description
At01~At96 Output Channel Operating Mode	0~9999	Setting it to 0 means executing APID, which is a PID control algorithm with AI capabilities; Setting it to 1 enables Auto-tuning (At); Setting it to 2 executes the ON/OFF control mode; Setting it to 3 executes manual control mode; Setting it to 4 means stopping control.
OP01~OP96 Output Value of Output Channel	0~25650	In automatic mode, this channel is read-only and represents the PID control output value (for ON/OFF control, 0 means off and 25650 means on). In manual mode, this channel is both readable and writable, and the written value can serve as the manual output control value. The value 25600 indicates 100% output.

When PID control logic is not needed, for example, if the main output of the instrument is used as an alarm, you can set At to 2 to switch to bit control mode.

When manual output is required, set Atxx to 3 to switch to manual control mode, and then modify the corresponding output value OPxx.

6.12 Follow Output Function

When using one probe to control multi-loop outputs, you can use the follow output function and fine-tune the following percentage for more precise adjustments, such as balancing different points inside a container.

Parameter	Setting Values	Description
P01~P96	0~32000	In follow mode, this is used to define the percentage of output to follow, with a unit of 0.1%. A register value of 1000 means 100% following.
At01~At96	2xx, where xx indicates the channel number to follow	For example: At10=206, it indicates the output value of channel 10 is calculated as OP10 = OP6 * P10 * 0.1%, which means OP10 follows OP6 output, with P10 being expressed in units of 0.1%. The valid range for the channel number xx in this function is 1~16

6.13 Combination Mode Multi-Channel Instrument

Parameter	Setting Values	Description
AFC	AFC.7 (binary bit 7, used to switch the transmitted value for 422 communication)	AFC.7=0: When an expansion module, such as YL-1016, is connected, output values are transmitted; AFC.7=1: When an host is connected, PV measurement values are transmitted. For example, if three 8x48 units are combined using a multi-in-one module (usually with an additional converter in the setup), and you want the last unit to link its display value with the first two units. In this case, the AFC of the two units on the left should be set to 128, and the change will take effect after powering off and on. Assuming the three 8x48 units from left to right are numbered 1 to 3, unit 1 will transmit its PV to registers 5~8 of unit 2, and unit 2 will transmit its PV to registers 5~12 of unit 3. Therefore, on unit 3, PV1~4 are its own display values, PV5~8 are the display values from unit 2, and PV9~12 are the display values from unit 1. All channel alarms can be set on unit 3. If unit 3 is a model with accuracy level 6 or above, such as the 8848, you can also use the Pn function to use the PVs transmitted from the previous units for more complex interlock logic.

If a converter is used, please refer to the converter's instruction for the communication protocol.

· **EtherCAT converter download link:**

https://www.yudian.com/down/10038.html?keys=EtherCAT

When using a TCP converter, if you only need to communicate independent channel parameters (before code 1631), you can directly follow the address mapping in this manual, with each unit using 8 channels. For example, 0~7 correspond to SP1~8 of the first unit, 8~17 correspond to SP1~8 of the second unit, and so on. The parameter arrangement may change after this, so refer to the converter manual for the corresponding mapping.

· **TCP manual download link:**

https://www.yudian.com/down/10038.html?keys=TCP

7 Communication Functions and Complete Parameter Registers

AI-8 Series High-Precision Multi-Loop Controller can be connected to the host computer via an RS485 serial port, or through Yudian's TCP-Modbus or EtherCAT communication controllers. It uses an asynchronous serial communication interface, with the interface level compliant with the specifications in the RS485 standard. The data format consists of 1 start bit, 8 data bits, no parity bit or even parity bit, and 1 stop bit. The communication baud rate can be adjusted from 4,800 to 115,200 bps. If the baud rate exceeds 28,800 bps, an optional high-speed optocoupler communication module is required. For long communication distances, a baud rate of 4,800 bps is recommended.

AI-8 Series High-Precision Multi-Loop Controller supports the MODBUS-RTU protocol with the following commands: 03H (read parameters and data), 06H (write a single parameter), and 10H (write multiple parameters). It can communicate with other MODBUS devices. To ensure the communication speed, the AI instrument uses RTU (binary) mode. The communication interface settings allow for the selection of 1 to 2 stop bits, no parity or even parity, and instrument addresses in the range of 0~80.

For the 03H command, a maximum of 32 datas can be read at a time, with each data being 2 bytes. For example, to read 2 data, the command would be as follows:

Instrument address	Read command (function code)	Read parameter address code	Read data length	Check code
XXH	03H	00H 01H	00H 02H	CRC

For the 06H command, one data is written at a time. The command sent would be:

Instrument address	Write command (function code)	Write parameter address code	Write data value	Check code
XXH	06H	00H 01H	03H E8H	CRC

The format for the 10H write command allows a maximum of 16 data (32 bytes) to be written at a time. For example, the command to write a single data would be:

Instrument address	Write command	Write parameter address code	Write number of data	Write bytes	Write data value	Check code
XXH	10H	00H 01H	00H 01H	02H	03H E8H	CRC

Address Code	Register	Parameter Name	Functional Description
0000H~ 005FH	0000~0095	SP01~SP96 Group 1~96 Preset Setpoints	Setting range: -9990~32000.

0060H~ 00BFH	0096~0191	P 01~P 96 Proportional Band	Setting range: 0~32000, with the same unit as the setpoint.
00C0H~ 011FH	0192~0287	I 01~I 96 Integral Time	Unit: 0.1 seconds, setting range: 0.0~3200.0 seconds.
0120H~ 017FH	0288~0383	d 01~d96 Derivative Time	Unit: 0.01 seconds, setting range: -327.60~+327.60 seconds.
0180H~ 01DFH	0384~0479	In01~In96 Input Channel Configuration Parameter Group Selection	Setting range: 0~9999.
01E0H~ 023FH	0480~0575	Sc01~Sc96 Input Channel Measurement Value Offset	Setting range: -9990~32000
0240H~ 029FH	0576~0671	On01~On96 Output Channel Configuration Parameters	Setting range: 0~999.
02A0F~ 02FFH	0672~0767	Pn01~ Pn96 Output Channel PID Configuration Parameter Group and Measurement Channel Selection	Setting range: 0~9999.
0300H~ 035FH	0768~0863	At01~At96 Output Channel Operating Mode	Setting range: 0~5, 1xx, 2xx, 3xx.
0360H~ 03BFH	0864~0959	OP01~OP96 Output Value of Output Channel	In automatic mode, this channel is read-only and represents the PID control output value (for ON/OFF control, 0 means off and 25650 means on). In manual mode, this channel is both readable and writable, and the written value can serve as the manual output control value. The value 25600 indicates 100% output.
03C0H~ 041FH	0960~1055	HA01 ~HA96 Multifunctional Parameter 1	Setting range: -9990~32000. By default, it functions as a high limit alarm, but it can be redefined for other functions via AFA.
0420H~ 047FH	1056~1151	LA01~LA96 Multifunctional Parameter 2	Setting range: -9990~32000. By default, it functions as a low limit alarm, but it can be redefined for other functions via AFA.
0480H~ 04DFH	1152~1247	SV1~SV96 PID Actual Setpoint	In the ordinary fixed-point temperature control mode, this is simply equal to SP1~SP96. Note that in modes with heating/cooling slope control or secondary control mode in cascade control, it is not equal to SP1~SP96.

			When the heating/cooling slope limit function is available, the start setpoint can be defined by writing this parameter. At the same time, by inputting data for multiple channels , synchronized heating and cooling curves for multiple channels can be achieved.
04F0H~ 04F3H	1264~1267	Forced Manual Operation	For channels 1~4 can be forced into manual operation. Setting the value to 1 forces the corresponding channel into manual mode. A value of 0 or any other value allows the channel to operate according to the At parameter. However, if the At parameter is set to a mode greater than 4, such as in cascade control output modes, this parameter will not control the operation.
0600H ~065FH	1536~1631	PV1~96 Measured Value	Read only; if the measurement value needs to be transmitted from the host computer, the channel can be closed and the Sc parameter written to achieve this. The system will automatically refresh this parameter.
0660H ~066FH	1632~1647	PV1~8 Measurement Values 32bit Data	Read-only; provide high-resolution 32bit data for channels 1~8 (positive values only). This data is suitable for applications requiring high-resolution displays and can be subjected to secondary filtering defined by the FL32.
0680H~ 06AFH	1664~1711	Alarm Status, 48 Parameters	Each parameter contains the alarm status for two channels. The high byte corresponds to the odd-numbered channel, and the low byte corresponds to the even-numbered channel. BIT0 to BIT4 correspond to the following alarms: input error, HA, LA, dHA, and dLA. When the alarm lock function is enabled, this parameter can be written to unlock.

		Alarm Status Bits		**Description (x or xx represents the channel number)**
		Even channels e.g. CH02	Bit0	0: Sensor input signal is normal 1: Sensor input error or input signal exceeds the range oral
			Bit1	0: Input signal does not exceed the set upper limit HAxx value 1: Input signal exceeds the set upper limit HAxx value, triggering HA alarm
			Bit2	0: Input signal does not exceed the set lower limit LAxx value 1: Input signal exceeds the set lower limit LAxx value, triggering L alarm
			Bit3	0: Input signal does not exceed the set upper limit deviation dHAl value 1: Input signal exceeds the set upper limit deviation dHAx value, triggering dHA alarm
			Bit4	0: Input signal does not exceed the set lower limit deviation dLAx value 1: Input signal exceeds the set lower deviation dLAx value, triggering dLA alarm
			Bit5~bit7	Spare
		Odd Numbered Channels e.g. CH01	Bit8	0: Sensor input signal is normal 1: Sensor input error or input signal exceeds the range oral
			Bit9	0: Input signal does not exceed the set upper limit HAxx value 1: Input signal exceeds the set upper limit HAxx value, triggering HA alarm
			Bit10	0: Input signal does not exceed the set lower limit LAxx value 1: Input signal exceeds the set lower limit LAxx value, triggering L alarm
			Bit11	0: Input signal does not exceed the set upper limit deviation dHAl value 1: Input signal exceeds the set upper limit deviation dHAx value, triggering dHA alarm
			Bit12	0: Input signal does not exceed the set lower limit deviation dLAx value 1: Input signal exceeds the set lower deviation dLAx value, triggering dLA alarm
			Bit13~bit15	Spare
06C0H~06EFH	1728~1775	Control Status, 48 Parameters		Read only; each parameter includes the control status of 2 channels. BIT0: 0 indicates auto-tuning state, 1 indicates non-auto-tuning state; BIT1: 0 indicates normal control, 1 indicates stop control state. Note: Do not write to this parameter. If need to change the related control status, write to the corresponding parameter. The system will automatically refresh this parameter.

<table>
<tr><td></td><td colspan="3">
<table>
<tr><th colspan="2">Control Status</th><th>Description, this parameter is read-only</th></tr>
<tr><td rowspan="3">Even channels e.g. CH02</td><td>Bit0</td><td>0: AT Auto-tuning in progress
1: Non-auto-tuning in progress</td></tr>
<tr><td>Bit1</td><td>0: Normal control mode
1: Current channel is in stop control state (STOP mode)</td></tr>
<tr><td>Bit2~bit7</td><td>Spare</td></tr>
<tr><td rowspan="3">Odd Numbered Channels e.g. CH01</td><td>Bit8</td><td>0: AT Auto-tuning in progress
1: Non-auto-tuning in progress</td></tr>
<tr><td>Bit9</td><td>0: Normal control mode
1: Current channel is in stop control state (STOP mode)</td></tr>
<tr><td>Bit10~bit15</td><td>Spare</td></tr>
</table>
</td></tr>
<tr><td>06F0H~
07FFH</td><td>1776~2047</td><td>Alternate Address</td><td>Reserved for future version upgrades. Please do not use.</td></tr>
<tr><td>0800~
0803H</td><td>2048~2051</td><td>InP1~4;
Input Specification Definition</td><td>When selecting the input specification, this parameter needs to match the corresponding module. For example, the thermocouple input module must be set to thermocouple as the input specification.</td></tr>
<tr><td>0804H~
0807H</td><td>2052~2055</td><td>ScL1~4 Linear Input Calibration Lower Limit Value</td><td>Define the lower limit of the linear input scale, with units the same as the measured value.</td></tr>
<tr><td>0808H~
080BH</td><td>2056~2059</td><td>ScH1~4
Scale upper limit value</td><td>Define the upper limit of the linear input scale, with units the same as the measured value.</td></tr>
<tr><td>080CH~
080FH</td><td>2060~2063</td><td>FIL1~4
Digital Filtering</td><td>Define the intensity of digital filtering for the input. A setting of 0 means no filtering, 1 represents median value filtering, and values greater than 2 represent integration filtering. The unit is the sampling period.</td></tr>
<tr><td>0810H~
0813H</td><td>2064~2067</td><td>dHA1~4 Alarm Parameters</td><td>The default is positive deviation alarm, but it can also be defined as a upper limit alarm.</td></tr>
<tr><td>0814H~
0817H</td><td>2068~2071</td><td>dLA1~4 Alarm Parameters</td><td>The default is negative deviation alarm, but it can also be defined as a low limit alarm.</td></tr>
<tr><td>0818H~
081BH</td><td>2072~2075</td><td>AAF1~4
Alarm Function Selection</td><td>AAF.0~AAF.4 select whether the input fault, HA alarm, LA alarm, dHA, and dLA alarms will be automatically reset or not. If set to 1, the alarm will not be automatically reset, and the customer needs to send a write command to clear the corresponding alarm status register to release the alarm action.</td></tr>
<tr><td>081CH~
081FH</td><td>2076~2079</td><td>HYS1~4 Hysteresis</td><td>The unit is the same as the measurement value. It is used as the hysteresis for alarms, ON/OFF control, and PID auto-tuning. However, auto-tuning can also use EHYS as the hysteresis by selecting it in Act.1.</td></tr>
<tr><td>0820H~
0823H</td><td>2080~2083</td><td>OPL1~4 Output Lower Limit</td><td>Setting range 0~100, default as output lower limit. It can also be defined as the output value in the event of input faults/overload.</td></tr>
</table>

0824H~ 0827H	2084~2087	OPH1~4 Output Upper Limit	Setting range: 0~105, used as the output upper limit.
0828H~ 082BH	2088~2091	OHE1~4 Segmented Power Limit Setting	OPH valid range, with the same unit as the measurement value. This is used to implement the segmented output limit function. When the measurement value is less than OHE, the output is limited by OPH. When the measurement value exceeds OHE, the output is not limited, i.e., it is 100%.
082CH~ 082FH	2092~2095	Act1~4 Control Function Selection	Set the range from 0 to 16. Use binary bits 0 or 1 to select functions.
0830H~ 0833H	2096~2099	Srh1~4 Heating Slope Limit Value	Indicate the heating rate in degrees per minute. A value of 0 means no limit.
0834H~ 0837H	2100~2103	SrL1~4 Cooling Slope Limit Value	Indicate the cooling rate in degrees per minute. A value of 0 means no limit. The usage is the same as the Srh parameter.
0838H~ 083BH	2104~2107	SPL1~4 Setpoint Lower limit	Belong to the output configuration parameter group, used to set the lower limit of the setpoint for channels 1~4. Note that it only restricts the range of the actual set value SV and does not limit the setting range for the setpoint SP.
083CH~ 083FH	2108~2111	SPH1~4 Setpoint Upper Limit	Belong to the output configuration parameter group, used to set the upper limit of the setpoint for channels 1~4. Note that it only restricts the range of the actual set value SV and does not limit the setting range for the setpoint SP.
0840H	2112	Addr Communication Address	Define the communication address of this device, with a range of 0~88.
0841H	2113	bAud Communication Baud Rate	Define the baud rate, the unit is 0.1K, setting range: 9.6K~115.2K.
0842H	2114	Adn Number of input channels for this device	Define the number of input channels for this device.
0843H	2115	ACH Extended Input Channel Count	Define the extended input channel count.
0844H	2116	Ctn Control Channel Count	Indicate the number of control channels enabled. Each control channel occupies 10ms of processing time. If set to 32, the actual control cycle will be at least 0.32 seconds.

0845H	2117	Srun Run/Stop Selection	If Srun is set to 9655, all PID channels will stop control output. If Srun is set to 15, the control mode remains active; however, when the power is turned off and then back on, the system will automatically enter the 9655 global stop state.
0846H	2118	Ctl	Define the control period, maximum range: 0.0 to 50.0 seconds
0847H	2119	ALAL Alarm Public Output Configuration	ALAL.0~4 define whether input fault, HA alarm, LA alarm, dHA, and dLA alarms will be output as a common alarm. Set to 0 for no output; set to 1 for output.
0848H	2120	ALCH Alarm Independent Output Range Configuration (requires external alarm module expansion)	Define the start and end numbers of the independent alarm output channels for expansion. Although up to 5*97 alarm signals can be generated, note that the maximum number of extended alarm output channels is 256. For instance, if each channel requires 4 independent alarms, the difference between the output channel end number and the output channel start number should not exceed 64.
0849H	2121	ALb t Alarm Independent Output Configuration	ALbt.0~4 define whether input fault (including over-range, open circuit, communication disconnection, etc.), HA alarm, LA alarm, dHA, and dLA alarms are output. Set to 0 for no output; set to 1 for output. For example, if ALAL = 7, ALbt = 3, and ALCH = 16, the extended alarm output module will output 3 common alarms and 32 independent alarm signals. The output terminal numbers 1~3 will correspond to the common input alarm, high limit alarm, and low limit alarm; terminals 4~7 will sequentially correspond to channel 1 input error alarm, channel 1 HA alarm, channel 2 input error alarm, channel 2 HA alarm, and so on. For another example, if ALAL = 0, ALbt = 31, and ALCH = 616, the system will output 55 alarm signals, with 5 alarms for each of channels 6~16.
084AH	2122	AFA Function Parameter Configuration A	Set the range from 0 to 255. Use binary bits 0 or 1 to select functions.
084BH	2123	AFB Function Parameter Configuration B	Set the range from 0 to 4. Use binary bits 0 or 1 to select functions.
084CH	2124	AFC Function Parameter Configuration C	Set the range from 0 to 255. Use binary bits 0 or 1 to select functions.
084DH	2125	Nonc	Nonc.0~5: Define the output as normally open (NO) or normally closed (NC) for input fault, HA alarm, LA alarm, dHA alarm, dLA alarm, and common alarm, respectively. 0: Normally open (closes when an alarm

			occurs). 1: Normally closed. Note that if the system is powered off, the relay is disconnected regardless of the settings.
084EH	2126	EAF host sampling parameter configuration; note that this is only valid for the host's sampling rate. The sampling rate of the extended input module is configured by the extension module itself.	EAF=0: The main input refresh rate is automatically selected based on the CTI control cycle parameter. For thermocouples and voltage/current inputs, the fastest rate is 20ms per channel; for RTD, it is 80ms per channel. EAF=1, the refresh rate is approximately 20mS per channel, and for RTD inputs, it is approximately 80mS per channel. EAF=2, the refresh rate is approximately 40mS per channel, and for RTD inputs, it is approximately 160mS per channel. EAF=3, the refresh rate is approximately 10mS per channel, and for RTD inputs, it is approximately 80mS per channel. Note: The number of channels is set to 1, with a maximum refresh rate of 20mS.
084FH	2127	EHYS Additional Hysteresis	If a different hysteresis value is required for auto-tuning and ON/OFF control compared to the HYS alarm hysteresis, EHYS can be selected as the hysteresis value for auto-tuning and ON/OFF control through Act.1.
0850H	2128	dPt	The data range is 0~3. Set the decimal point position on the host's operation panel.
0851H	2129	Host Status	Read-only, BIT0~3 indicate O1~O4 of the host computer respectively, BIT11 corresponds to AL1, and BIT12 corresponds to AL2. A value of 1 indicates output (which can be defined by AFC.5). BIT8 is set to 1 to indicate a system fault, such as a memory data error, while BIT9 is set to 1 to signal the presence of a global alarm.
0852H	2130	Loc Parameter Locking	When Loc.5 is set to 0, all parameters can be written; when set to 1, writing parameters in the range of 0800H~08FFH is not allowed. Loc.6, when set to 0 and 1, respectively, indicates whether single-byte write commands are allowed or not. Loc.7, when set to 0 and 1, respectively, indicates whether multi-byte write commands are allowed or not. When writing is not allowed, the instrument will still return the command but will not actually modify the parameter.
0853H	2131	Instrument Model Characteristic Code	Change to read-only, indicate the instrument model.
0854H	2132	Machine Number High Bits	Read-only, indicate the high 4 digits of the machine number.

0855H	2133	Machine Number Low Bits	Read-only, indicate the lower 4 digits of the machine number.
0856H	2134	OPCH Output Start Channel	OPCH local output start channel of this device: When set to 1, output 1 corresponds to channel 1. If set to 5, output 1 corresponds to the output value OP5 of channel 5. This function is used when channels 1~4 are only used for calculations and do not directly output.
0857H	2135	FL32 High-Resolution Measurement Filtering Constant	The unit is sampling periods, and the setting range is 0~999.
0858H	2136	AIF1 Heating and Overshoot Adjustment Parameter 1	Used by the manufacturer's debugging personnel
0859H	2137	AIF2 Heating and Overshoot Adjustment Parameter 2	Used by the manufacturer's debugging personnel
085AH	2138	P1FA First Slice Start Threshold	Used by the manufacturer's debugging personnel In some versions, this address parameter is still named as AIF3.
085BH	2139	dIFA	Used by the manufacturer's debugging personnel
085CH	2140	SPSr	Used by the manufacturer's debugging personnel
085DH	2141	AtFn	The At auto-tuning style parameter has a default factory setting of 55. When the difference between the PV and SV register values exceeds 600, a fast tuning mode is used, which requires only one heating cycle to determine the PID parameters (when INP = 13/17/18/22/35/36, the difference is 2000). When the difference is smaller, conventional auto-tuning is performed, requiring two heating and cooling cycles to complete. In the old version, the cutoff point was at SV, while in the new version, the cutoff point is slightly earlier. The tens digit of the AtFn parameter is used to adjust the size of the auto-tuning proportional band, with a range from 0~9. A larger number results in a larger proportional band for the auto-tuning. The ones digit is used to adjust the rate of heating, either faster or smoother. It will adjust the PID parameters accordingly, larger numbers are suitable for smoother heating, while smaller numbers result in more aggressive heating. If set to 10XX, where the thousands digit is 1, conventional auto-tuning will be forced.

085EH	2142	AIFL	Used by the manufacturer's debugging personnel In some versions, this address parameter is still named as P1Pr.
085FH	2143	P1TI	Used by the manufacturer's debugging personnel
		OPSn	Used by the manufacturer's debugging personnel
0861H~ 088FH	2145~2191	Spare	
0898H~ 08FBH	2200~2299	Input Nonlinear Calibration Table data, etc.	Used to implement multi-point correction. There are two types of calibration tables. For example, when IN1=11, it means the calibration table is defined starting from D1: The first type of table: D1 corresponds to the starting value, D2 to the full scale, and D3 to the segment range. Assuming the input is temperature, D1=0, D2=1000.0, and D3=500.0, the first correction point is at 0°C, with subsequent points added at 500°C increments. D4 corresponds to the correction value at 0°C, D5 at 500°C, and D6 at 1000°C. The second type of table: the starting point D1 is set to 325xx, where xx is the number of correction points, followed by xx measured values and their corresponding corrected values. For linear input, conversion according to the range is required. For example, if D1=32504, then D2~D5 are the four temperatures to be corrected, and D6~D9 are the corresponding corrected display values. D2 and D5 should include the maximum and minimum temperature range used. If the values of D2~D5 exceed this range, the instrument will report an overrange error.
0900H~	2305~	Temporarily Disable Read/Write	

When developing the host computer software, ensure that the instrument responds to each valid command within 0~5mS (Note: this excludes data transmission time and the interval required by the MODBUS protocol, which should be calculated based on different baud rates and data lengths). The host computer must wait for the instrument to return data before sending a new command; otherwise, errors may occur. If the instrument does not respond within the maximum response time, the potential reasons could include invalid commands, incorrect instrument or parameter addresses, communication line faults, the instrument being powered off, or mismatched communication addresses. In such cases, the host computer should resend the command or skip that instrument's address. The instrument will impose write range restrictions on parameter values in the address range 0800H~088FH. If an attempt is made to write data outside of this range, the error will still be executed, but the system will limit the range to prevent system malfunctions caused by writing out-of-range data.

8 Alarm and Fault Handling

1. Except for input errors, all other alarms on the instrument are generated based on the selected input values of the control channels. Typically, the input and control channel numbers are the same, but if they are different, e.g., if control channel 2 selects input channel 1 for the measurement value PV input, then the alarms for channel 2 will be based on the absolute value and control deviation of input channel 1, and will not relate to input channel 2. In particular, if two control channels select the same input channel for the measurement value, that channel's measurement value can have up to 8 related alarm settings at most. In addition, for input channels that are not selected, they should typically be disabled. Otherwise, the measurement behavior of that channel may affect the input error flags of the selected input channel associated with the output channel of the same number.

2. If any alarm condition is met, an additional global public alarm signal will be triggered. This alarm does not come from the extended alarm module but instead illuminates the host's own alarm indicator. It can be read through BIT9 of the 0851H. If the host has an optional alarm output module, this alarm can be output from the host.

3. Display/Alarm Symbols and Handling

Display/Alarm Symbols	Description	Response
Er 1 Er 1	Chip self-test error	Needs to be returned for inspection and repair
HA 1 HA 1	First-channel high limit alarm Check for causes of over-temperature, such as sensor disconnection or control overshoot	If this function is not needed, you can set HAL1 to the maximum value of 3200 to disable it.
LA 1 LA 1	First-channel low limit alarm Check for causes of low limit alarm, such as sensor disconnection or control overshoot.	If this function is not needed, you can set LAL1 to the maximum value of - 999 to disable it.
dH 1 dH 1	First-channel deviation high limit alarm Check for causes of over-temperature, such as sensor disconnection or control overshoot.	If this function is not needed, you can set dHA1 to the maximum value of 3200 to disable it.
dL 1 dL 1	First-channel deviation low limit alarm Check for causes of deviation low limit alarm, such as sensor disconnection or control overshoot.	If this function is not needed, you can set dLA1 to the maximum value of - 999 to disable it.
At 1 At 1	First-channel self-tuning status The process will complete after automatically heating and cooling 2 to 3 times	If you need to end manually, set the At 1 parameter to 0 or 4.
PV window flickering	Indicates an input issue	Troubleshoot input issues, such as whether the input specification INP is correct, whether the input wiring is normal, and if any other letters are flashing, it may be caused by other factors.

AE 1 AE 1	Indicates an input issue	1. It may be due to changes in sampling parameters such as Ctn, CtI, EAF, etc. Restore these parameters to their default values and restart to see if it returns to normal. 2. The transmission input may be disconnected. Check whether the wiring and settings of the transmitter are correct.

Note: The number 1 in alarm symbols such as HA1, LA1, etc. indicates the channel number. Alarms for other channels, such as HA2, LA2, indicate alarms for the corresponding channel. To clear the alarm, check the alarm parameters for the corresponding channel.

Follow our official WeChat account for technical support

www.yudian.com©2025 All rights reserved